P–4170
4918
22876

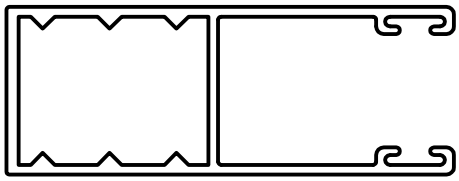

ACTUAL SIZE

EXPOSED SURFACE

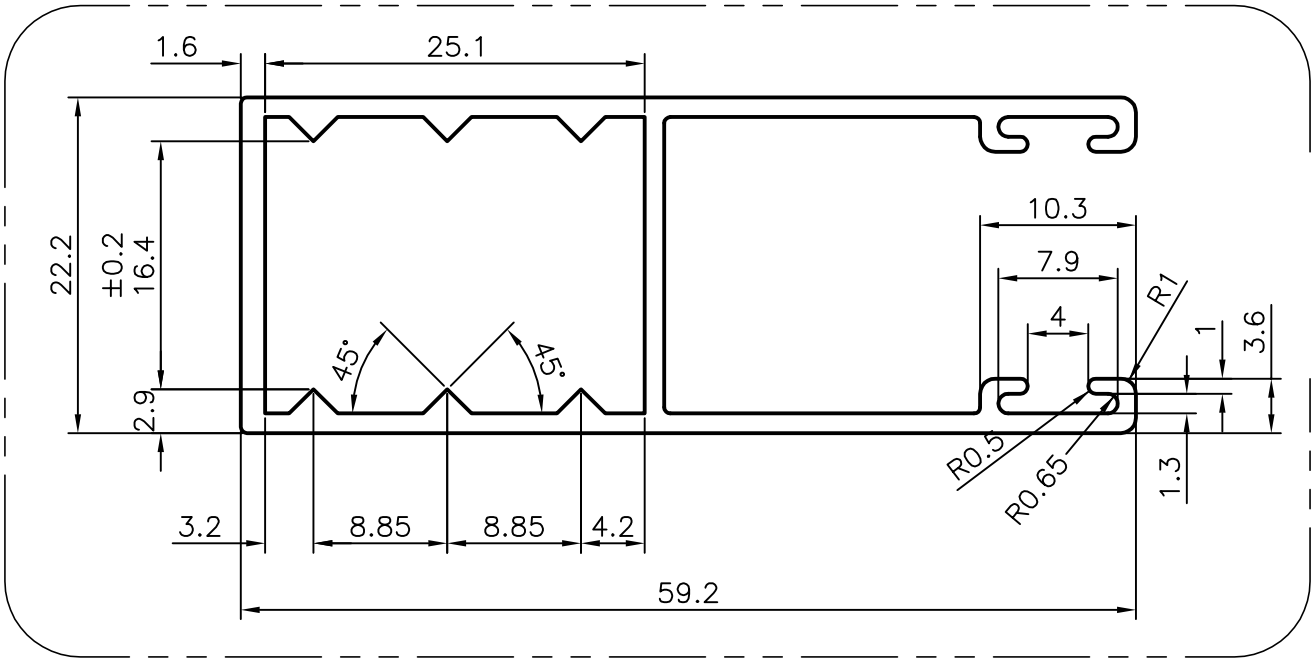

GENERAL WALL THICKNESS 1.3mm

JINDAL

SYMBOL OF QUALITY
AN ISO 9002 COMPANY

JINDAL ALUMINIUM LTD.

BANGALORE–560073 (INDIA)

1. ALL DIMENSIONS ARE IN mm.
2. ROUND OFF ALL SHARP CORNERS WITH 0.40 mm.
3. TOLERANCES WILL BE AS PER IS 6477–1983 UNLESS OTHERWISE SPECIFIED

	NAME	DATE
DRAWN	SUDIP ROY	11.03.2003
CHECKED		
APPROVED		

SCALE	1:1 / 2:1
AREA mm^2	244.037
PERIMETER mm.	251.646
WEIGHT kg/m	0.659
SECTION No.	22876
DRAWING No.	22876

PARTY'S NAME	M/S PROSOURCE INDUSTRIAL SOLUTION INC., CANADA
PARTY'S DRAWING No.	AS PER DRG. No. HL0020
ALLOY & TEMPER	6063 T5
DESCRIPTION	SIDE RAIL