P–4698
7135
22886

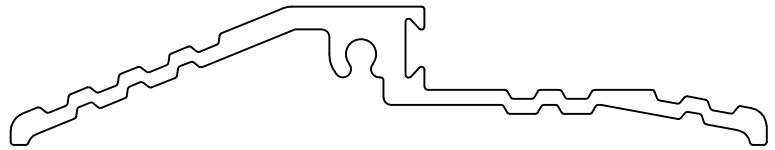

SCALE 1:1

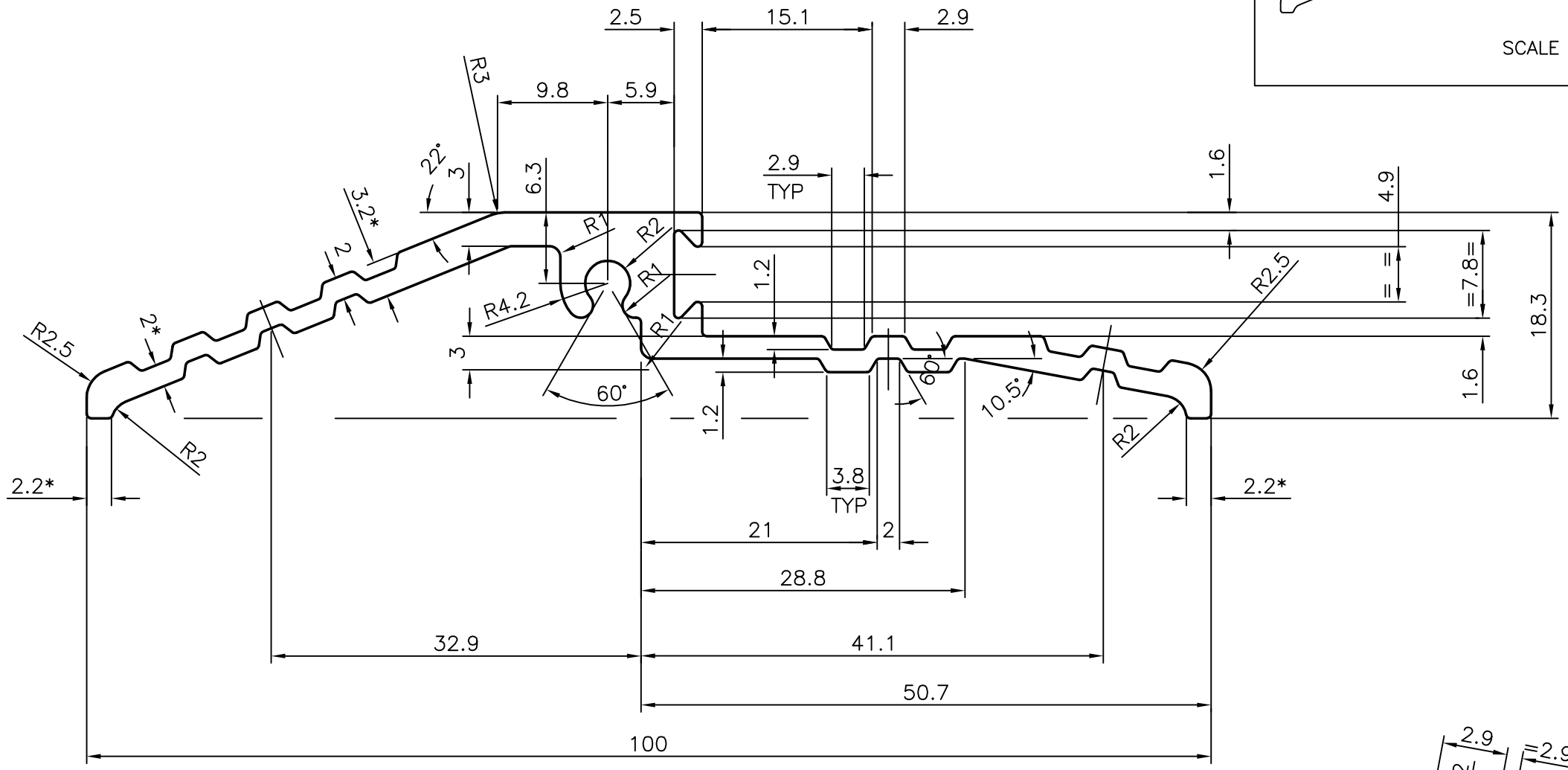

* MARKED DIMENSIN 2.2, 2, 3.2, & R2.5 WAS 4.7, 3, 4.2, & R5.5

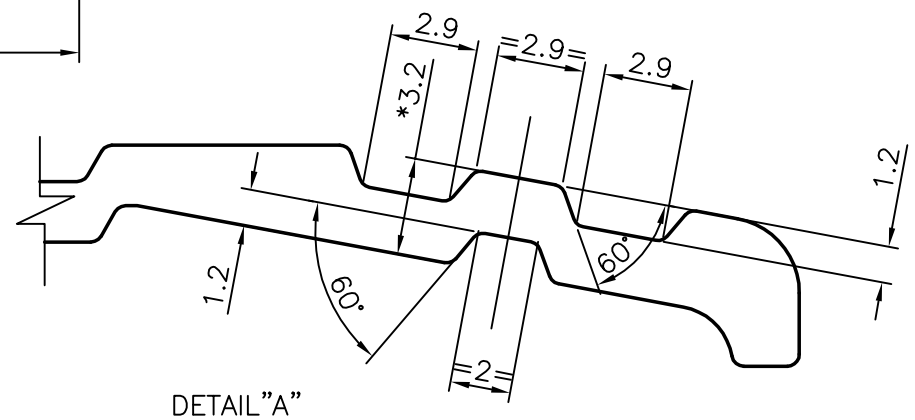

DETAIL"A"
SCALE 4:1

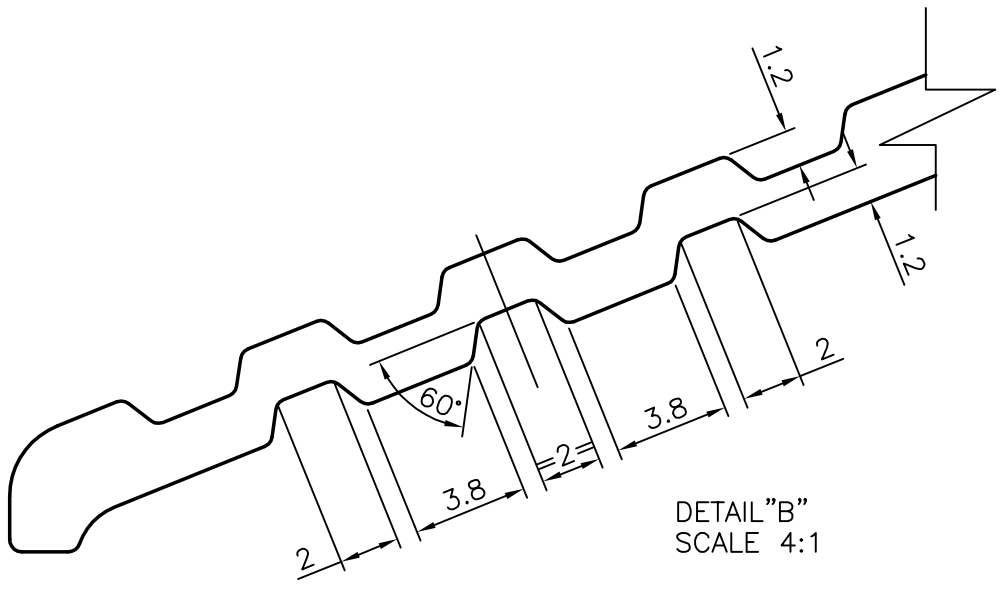

DETAIL"B"
SCALE 4:1

SYMBOL OF QUALITY
AN ISO 9002 COMPANY

JINDAL ALUMINIUM LTD.
BANGALORE–560073 (INDIA)

1. ALL DIMENSIONS ARE IN mm.
2. ROUND OFF ALL SHARP CORNERS WITH 0.40 mm.
3. TOLERANCES WILL BE AS PER BS:1474–1987 UNLESS OTHERWISE SPECIFIED

PARTY'S NAME	SYDNEY ALUMINIUM & GLASS DOHA
PARTY'S DRAWING No.	AS PER SAMPLE
ALLOY & TEMPER	6063 T6
DESCRIPTION	MISCELLANEOUS SECTION

	NAME	DATE
DRAWN	M.LINGAPPA	03–04–2004
CHECKED		
APPROVED		
SCALE		2:1, 4:1
AREA mm^2		328.40
PERIMETER mm.		267.6
WEIGHT kg/m		0.887

DRAWING No.	SECTION No.
P–4698	–
7135	7135–ISSUE–2
22886	22886