P–10393
S2763
22928

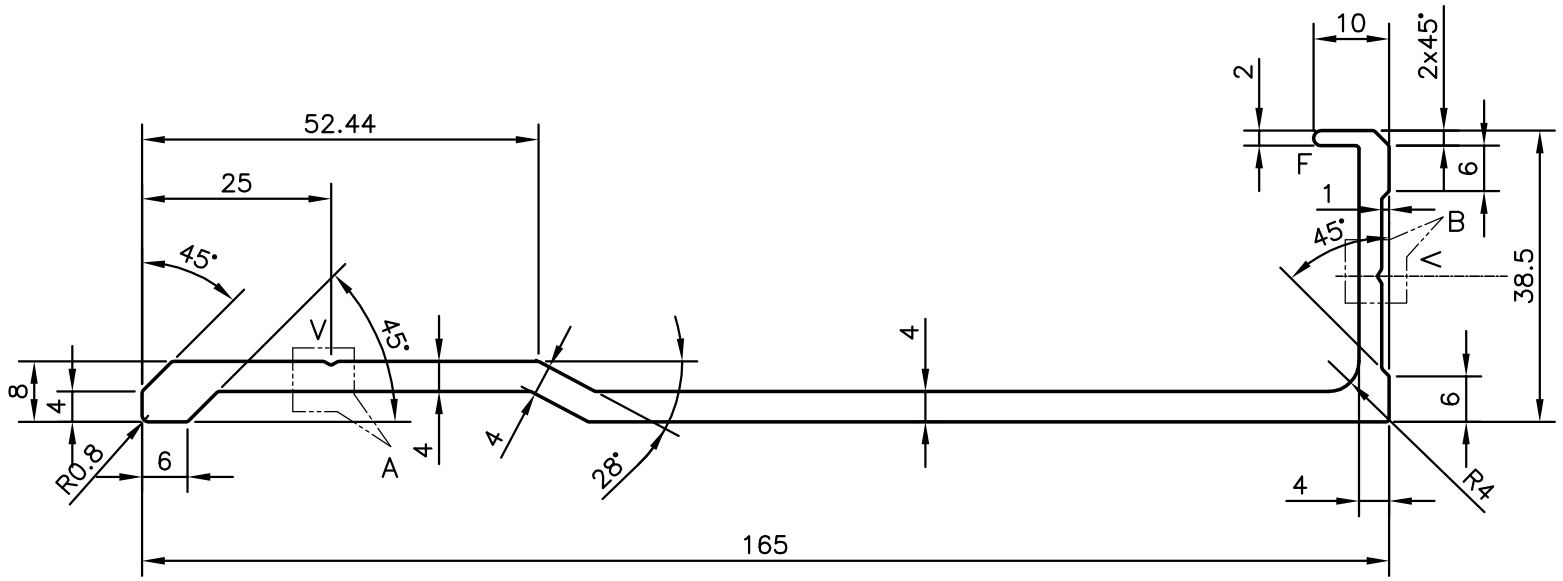

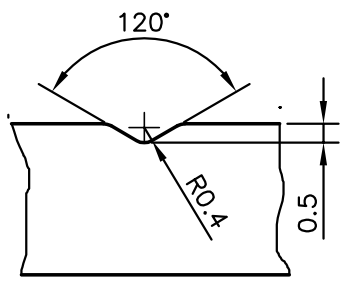

DETAIL 'A'
SCALE 5:1

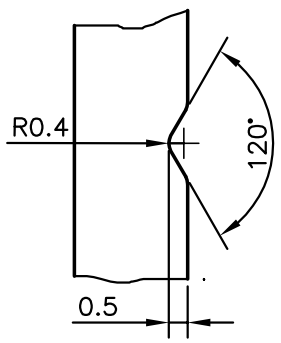

DETAIL 'B'
SCALE 5:1

F = FULL RADIUS

JINDAL SYMBOL OF QUALITY AN ISO 9001 COMPANY	*JINDAL ALUMINIUM LTD.* *BANGALORE–560073 (INDIA)*		NAME	DATE
		DRAWN	J.P.KAUSHIK	18–09–2010
		CHECKED		
		APPROVED	S.S.GARG	18–11–2010
1. ALL DIMENSIONS ARE IN mm. 2. ROUND OFF ALL SHARP CORNERS WITH 0.40 mm. 3. TOLERANCES WILL BE AS PER IS:3965–1981 UNLESS OTHERWISE SPECIFIED		SCALE		1:1
		AREA mm^2		814.262
		PERIMETER mm.		421.046
PARTY'S NAME	MASCON CONSTRUCTION SYSTEM PVT. LTD., MUMBAI	WEIGHT kg/m		2.199
		DRAWING No.		SECTION No.
PARTY'S DRAWING No.	BHX200	P–10393		–
ALLOY & TEMPER	6061 T6	S2763		S2763
		22928		22928
DESCRIPTION/END USE	BULKHEAD–200 mm SECTION			