P−12250
S3563
22955

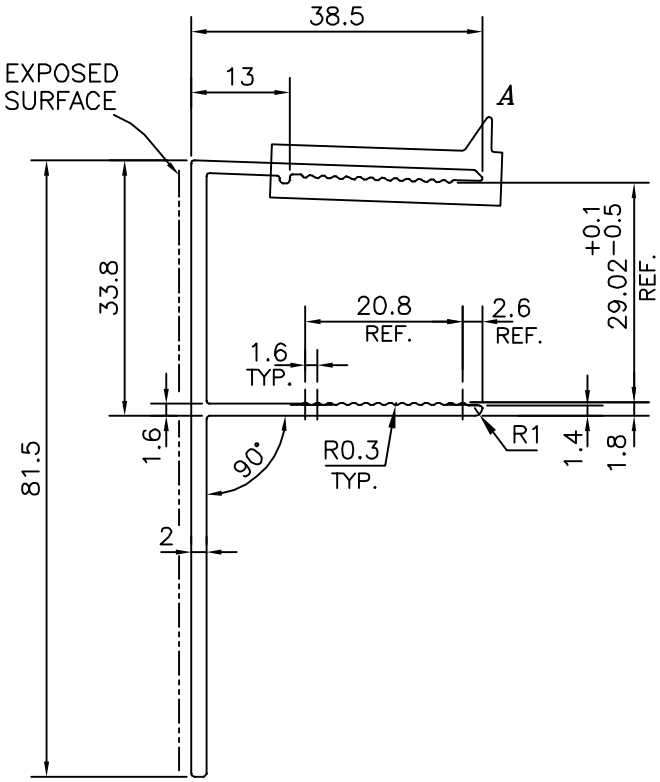

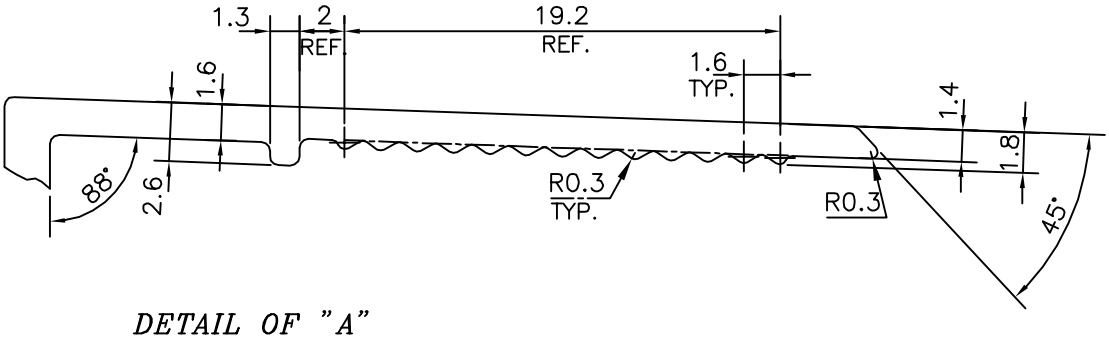

DETAIL OF "A"
SCALE 3:1

JINDAL SYMBOL OF QUALITY AN ISO 9001 COMPANY	*JINDAL ALUMINIUM LTD.* *BANGALORE−560073 (INDIA)*		NAME	DATE
		DRAWN	*PARVESH*	19−11−2012
		CHECKED		
		APPROVED	S.S.GARG	22−11−2012
1. ALL DIMENSIONS ARE IN mm. 2. ROUND OFF ALL SHARP CORNERS WITH 0.40 mm. 3. TOLERANCES WILL BE AS PER IS:3965−1981 , UNLESS OTHERWISE SPECIFIED		SCALE		1:1
		AREA mm^2		279.015
		PERIMETER mm.		317.647
		WEIGHT kg/m		0.753
PARTY'S NAME	DAN PAL (INDIA) PVT. LTD.,DELHI	DRAWING No.		SECTION No.
PARTY'S DRAWING No.	DPI/FPD−30/01/R−0	P−12250		−
ALLOY & TEMPER	6063 T5	S3563		S3563
		22955		22955
DESCRIPTION	ALUMINIUM FPD−30mm			