P−12252
S3565
22957

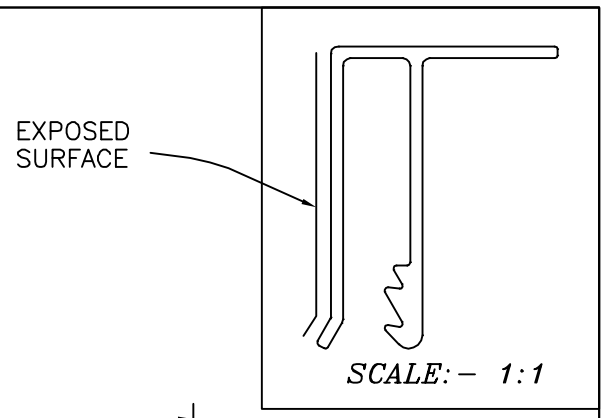

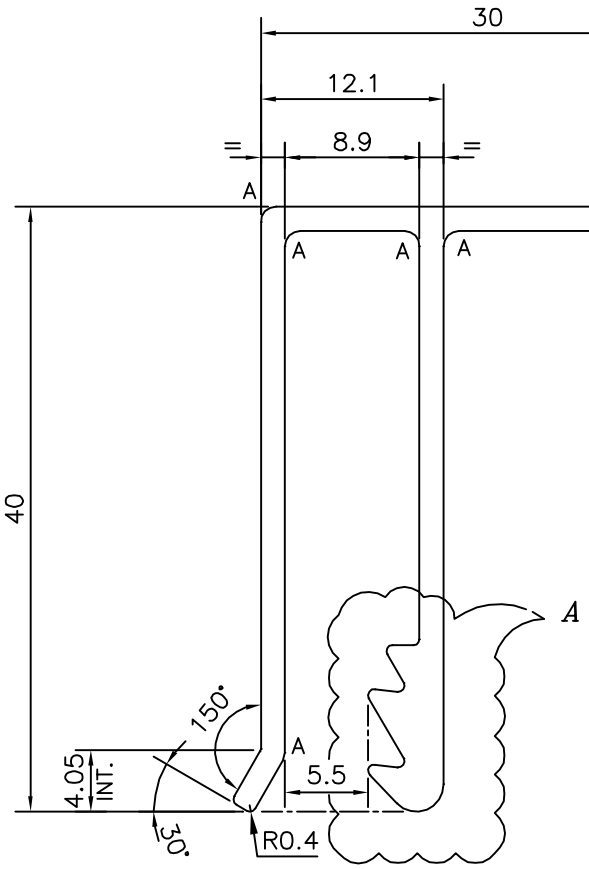

A = RADIUS 1mm. (5 PLACES)

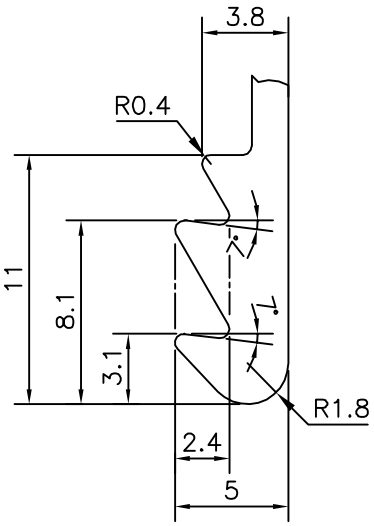

DETAIL OF "A"
SCALE 3:1

			NAME	DATE
JINDAL SYMBOL OF QUALITY AN ISO 9001 COMPANY	*JINDAL ALUMINIUM LTD.* *BANGALORE−560073 (INDIA)*	DRAWN	*PARVESH*	19−11−2012
		CHECKED		
		APPROVED	S.S.GARG	22−11−2012

1. ALL DIMENSIONS ARE IN mm.
2. ROUND OFF ALL SHARP CORNERS WITH 0.40 mm.
3. TOLERANCES WILL BE AS PER IS:3965−1981 , UNLESS OTHERWISE SPECIFIED

SCALE	2:1
AREA mm^2	193.852
PERIMETER mm.	223.369
WEIGHT kg/m	0.523

PARTY'S NAME	DAN PAL (INDIA) PVT. LTD.,DELHI
PARTY'S DRAWING No.	DPI/CON−40/01
ALLOY & TEMPER	6063 T6
DESCRIPTION	ALUMINIUM CONNECTOR (SINGLE LEG)−40mm

DRAWING No.	SECTION No.
P−12252	−
S3565	S3565
22957	22957