P-12980-1
S3842
22979

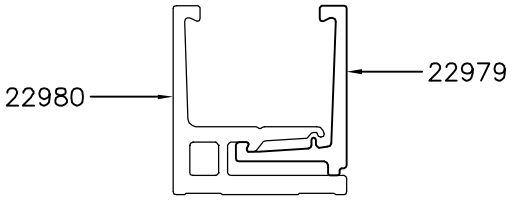

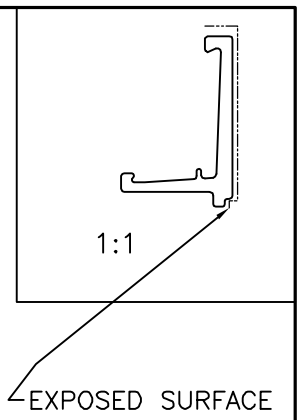

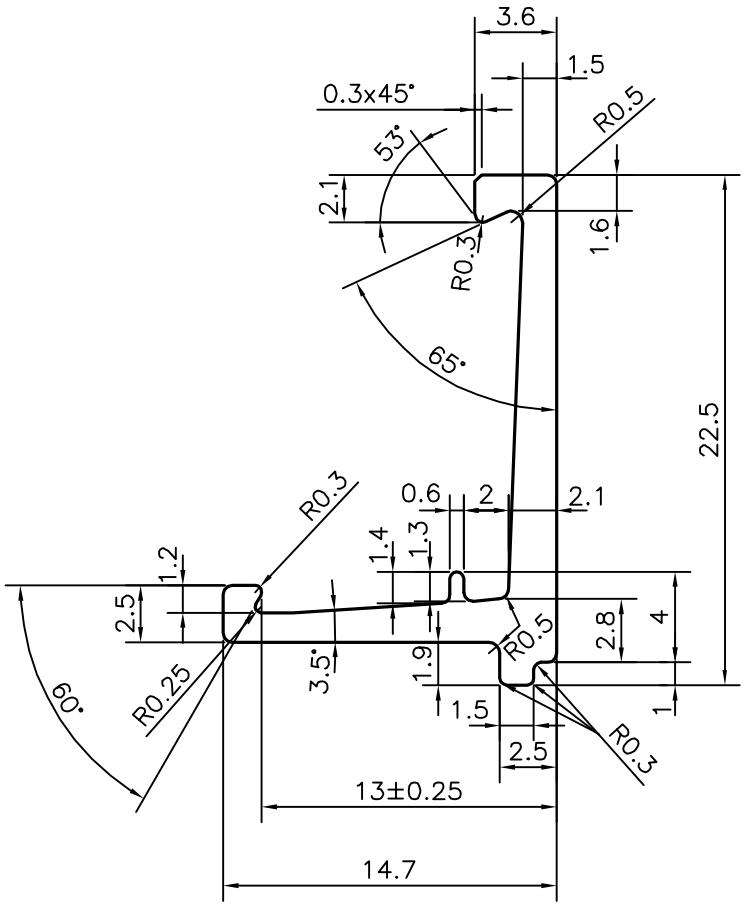

TOLERANCES ON OVERALL WIDTHS & WIDTHS ACROSS FLATS OF BARS, & REGULAR SECTIONS

UPTO 6.40mm – ±0.20	UPTO 32.0mm – ±0.38	UPTO 120.0mm – ±0.85	UPTO 320.00mm – ±1.70
UPTO 10.0mm – ±0.23	UPTO 50.0mm – ±0.46	UPTO 160.0mm – ±1.02	
UPTO 12.0mm – ±0.25	UPTO 60.0mm – ±0.53	UPTO 200.0mm – ±1.14	
UPTO 16.0mm – ±0.28	UPTO 80.0mm – ±0.69	UPTO 250.0mm – ±1.40	
UPTO 25.0mm – ±0.30	UPTO 100.0mm – ±0.75	UPTO 300.0mm – ±1.65	

JINDAL
SYMBOL OF QUALITY
AN ISO 9001 COMPANY

JINDAL ALUMINIUM LTD.

BANGALORE-560073 (INDIA)

	NAME	DATE
DRAWN	J.P.KAUSHIK	29-08-2013
CHECKED		
APPROVED	S.S.GARG	31-08-2013

1. ALL DIMENSIONS ARE IN mm.
2. ROUND OFF ALL SHARP CORNERS WITH 0.40 mm.
3. TOLERANCES WILL BE AS PER IS:3965-1981 UNLESS OTHERWISE SPECIFIED

SCALE	3:1
AREA mm^2	66.604
PERIMETER mm.	80.604
WEIGHT kg/m	0.180

PARTY'S NAME	GSC GLASS PVT. LTD., NOIDA
PARTY'S DRAWING No.	M31847
ALLOY & TEMPER	6063 T6
DESCRIPTION	MISC. SECTION

DRAWING No.	SECTION No.
P-12980-1	–
S3842	S3842
22979	22979