P–13877
S4234
22996

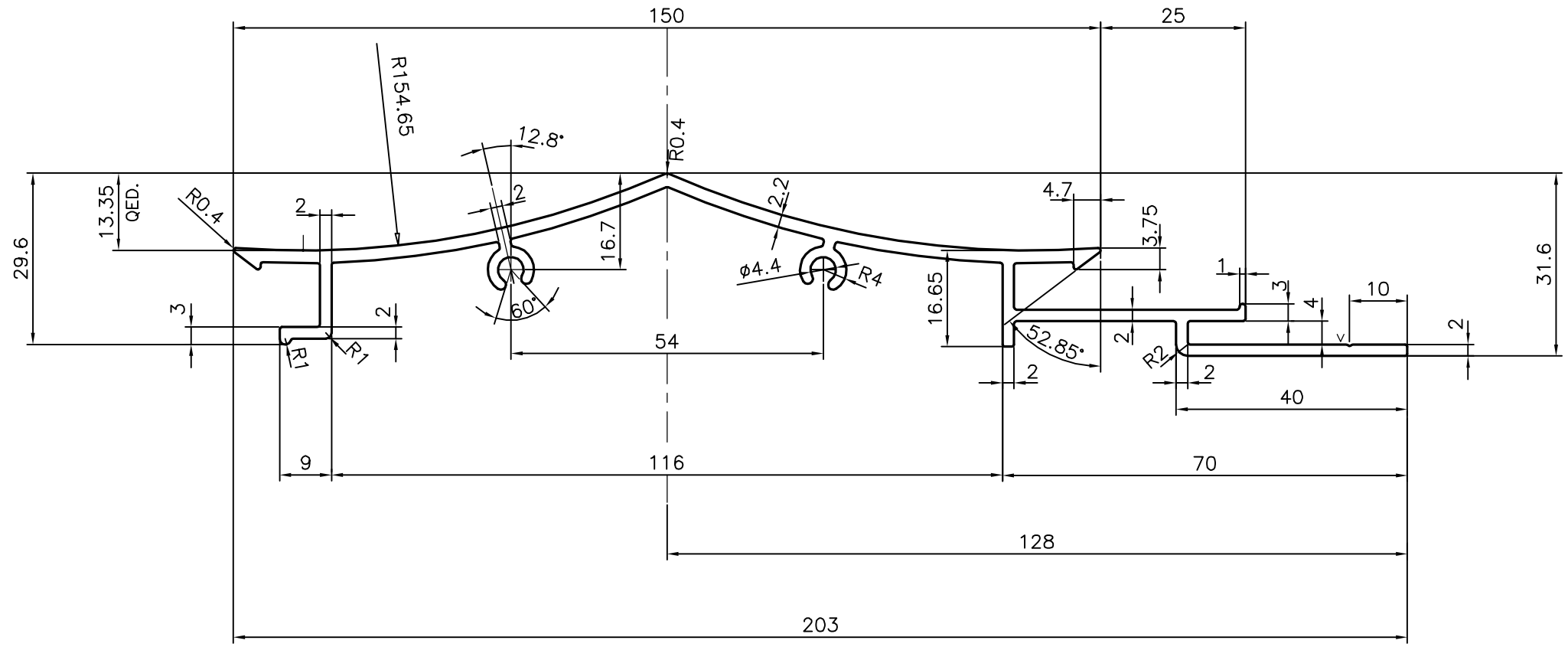

V = V GROOVE 0.3x90°

JINDAL SYMBOL OF QUALITY AN ISO 9001 COMPANY	*JINDAL ALUMINIUM LTD.* *BANGALORE–560073 (INDIA)*		NAME	DATE
		DRAWN	J.P.KAUSHIK	13–08–2014
		CHECKED		
		APPROVED	S.S.GARG	11–09–2014
1. ALL DIMENSIONS ARE IN mm. 2. ROUND OFF ALL SHARP CORNERS WITH 0.40 mm. 3. TOLERANCES WILL BE AS PER IS:3965–1981 UNLESS OTHERWISE SPECIFIED		SCALE		1:1
		AREA mm^2		639.082
		PERIMETER mm.		613.133
		WEIGHT kg/m		1.726
PARTY'S NAME	ALUMAYER INDIA PVT. LTD., MUMBAI	DRAWING No.		SECTION No.
PARTY'S DRAWING No.	NCP–25 & AS PER AutoCAD DRAWING	P–13877		–
ALLOY & TEMPER	6063 T6	S4234		S4234
		22996		22996
DESCRIPTION	MISC. SECTION			