5645
23778

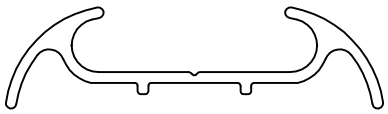

SCALE 1:1

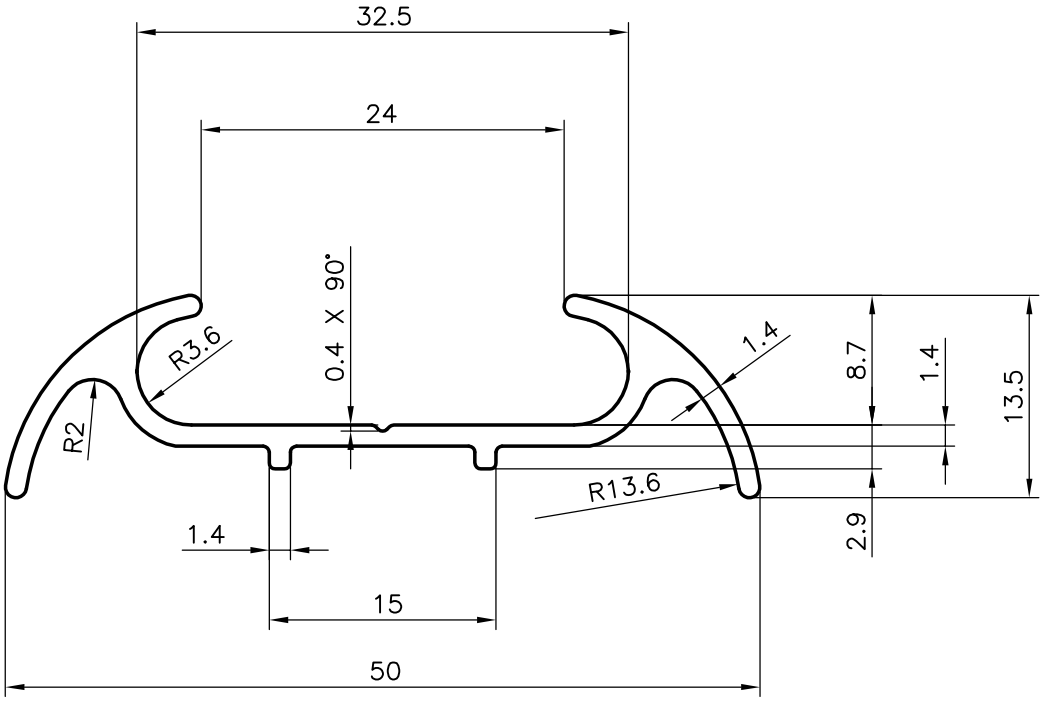

NO.OF PIECES REQUIRED IN 100 KGS:– 80 NOS.

SYMBOL OF QUALITY
AN ISO 9001 COMPANY

JINDAL ALUMINIUM LTD.
BANGALORE–560073 (INDIA)

	NAME	DATE
DRAWN	PRASHANT	13–11–2006
CHECKED		
APPROVED		

1. ALL DIMENSIONS ARE IN mm.
2. ROUND OFF ALL SHARP CORNERS WITH 0.40 mm.
3. TOLERANCES WILL BE AS PER IS:3965–1981 UNLESS OTHERWISE SPECIFIED

SCALE	2:1
AREA mm^2	126.65
PERIMETER mm.	159.335
WEIGHT kg/m	0.342

PARTY'S NAME	–
PARTY'S DRAWING No.	–
ALLOY & TEMPER	HE9 WP
DESCRIPTION	RUB RAIL

DRAWING No.	SECTION No.
5645	5645
23778	23778