| |
|---|
| 6059 |
| 24208 |
| |

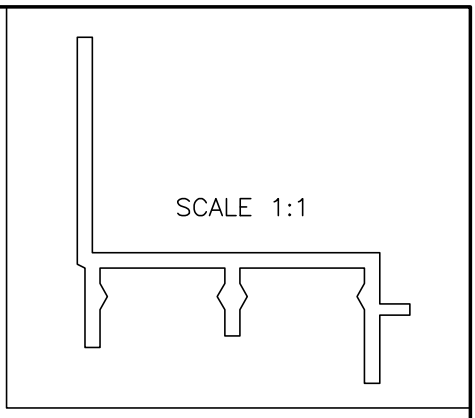


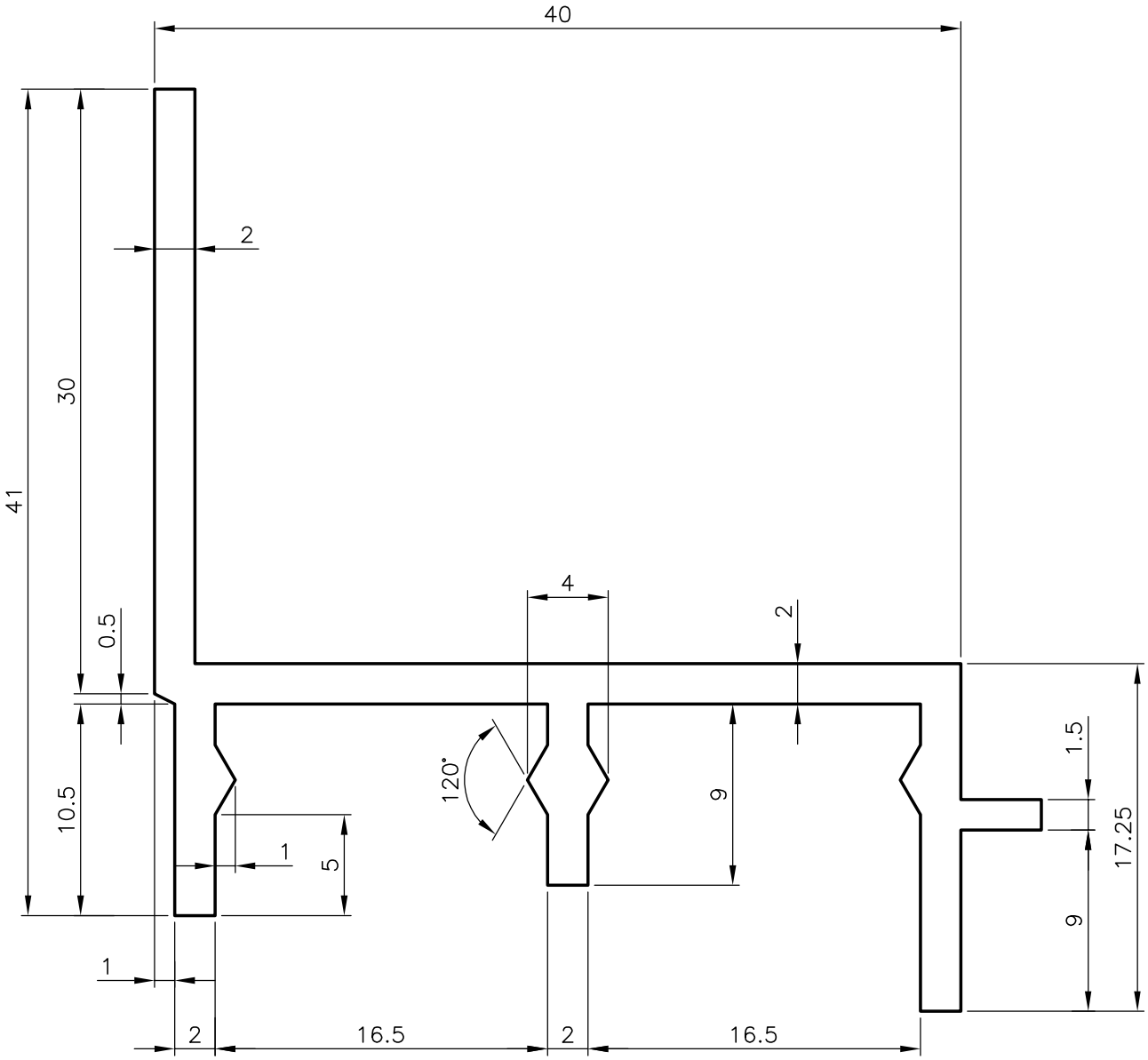


| | | | | |
|---|---|---|---|---|
| JINDAL<br>SYMBOL OF QUALITY<br>AN ISO 9001 COMPANY | *JINDAL ALUMINIUM LTD.*<br>*BANGALORE–560073 (INDIA)* | | NAME | DATE |
| | | DRAWN | RAGHAVENDRA | 03–06–2005 |
| | | CHECKED | | |
| | | APPROVED | | |

1. ALL DIMENSIONS ARE IN mm.
2. ROUND OFF ALL SHARP CORNERS WITH 0.40 mm.
3. TOLERANCES WILL BE AS PER IS:3965–1981 UNLESS OTHERWISE SPECIFIED

| | |
|---|---|
| SCALE | 3:1 |
| AREA $mm^2$ | 219.178 |
| PERIMETER mm. | 220.262 |
| WEIGHT kg/m | 0.592 |

| | |
|---|---|
| PARTY'S NAME | SWARAJ MAZDA |
| PARTY'S DRAWING No. | VSK 0305 |
| ALLOY & TEMPER | HE9 WP |
| DESCRIPTION | BUS WINDOW FRAME |

| DRAWING No. | SECTION No. |
|---|---|
| 6059 | 6059 |
| 24208 | 24208 |
| | |
| | |
| | |