P–4599–1
6551
24441

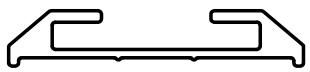

SCALE 1:1

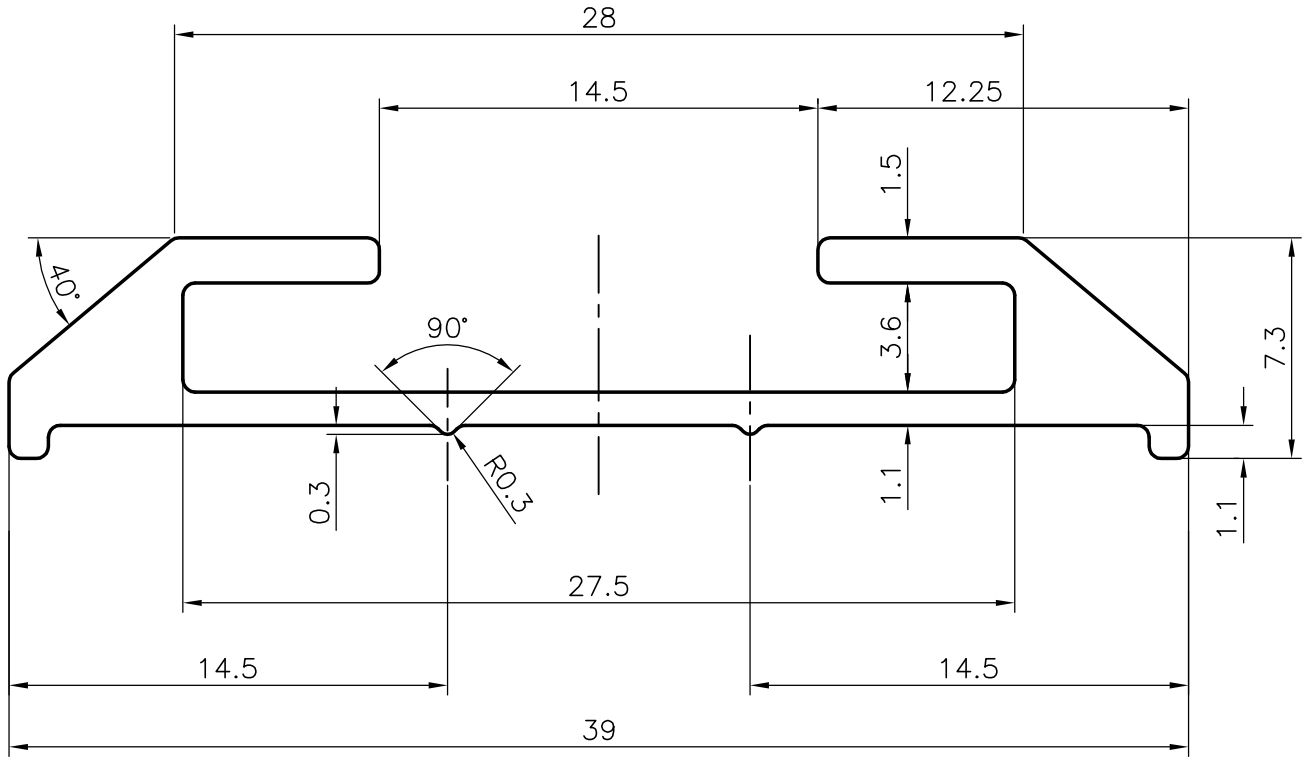

JINDAL SYMBOL OF QUALITY AN ISO 9001 COMPANY	*JINDAL ALUMINIUM LTD.* *BANGALORE–560073 (INDIA)*		NAME	DATE
		DRAWN	RAGHAVENDRA	03–12–2003
		CHECKED		
		APPROVED		
1. ALL DIMENSIONS ARE IN mm. 2. ROUND OFF ALL SHARP CORNERS WITH 0.40 mm. 3. TOLERANCES WILL BE AS PER IS: 3965–1981 UNLESS OTHERWISE SPECIFIED		SCALE		1:1 & 4:1
		AREA mm^2		99.05
		PERIMETER mm.		123.06
PARTY'S NAME	GENERAL CATEGORY, BANGALORE MARKET	WEIGHT kg/m		0.267
		DRAWING No.		SECTION No.
PARTY'S DRAWING No.	AS PER SAMPLE	P–4599–1		–
		6551		6551
ALLOY & TEMPER	HE9 WP	24441		24441
DESCRIPTION	TRANSPORT SECTION			