P–4625–1
6556
24446

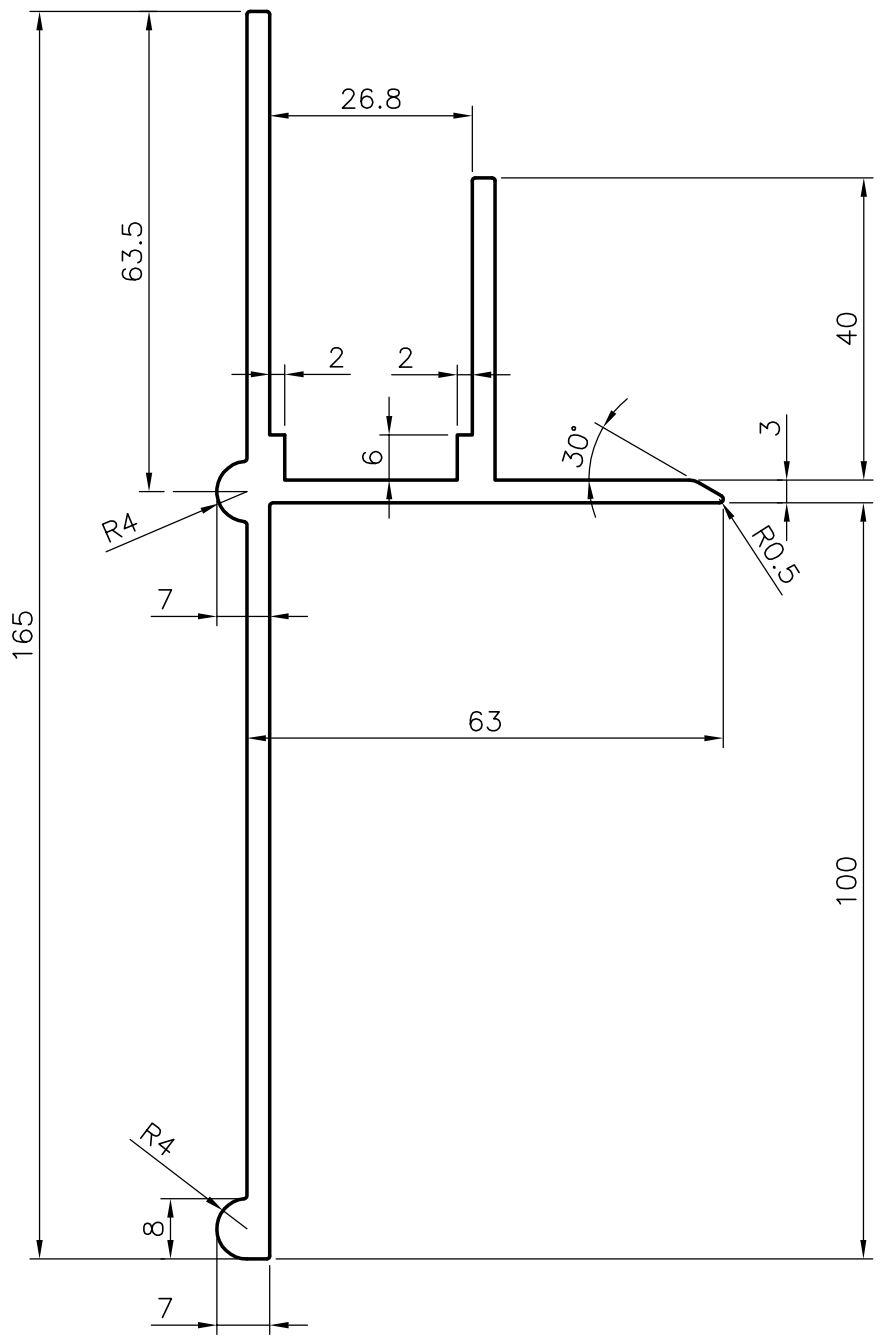

GENERAL WALL THICKNESS = 3 mm

ALL OUTER SURFACES BETTER FINISH REQUIRED.

			NAME	DATE
JINDAL SYMBOL OF QUALITY AN ISO 9001 COMPANY	*JINDAL ALUMINIUM LTD.* *BANGALORE–560073 (INDIA)*	DRAWN	RAGHAVENDRA	29–12–2003
		CHECKED		
		APPROVED		

1. ALL DIMENSIONS ARE IN mm.
2. ROUND OFF ALL SHARP CORNERS WITH 0.40 mm.
3. TOLERANCES WILL BE AS PER IS: 3965–1981 UNLESS OTHERWISE SPECIFIED

SCALE	1:1
AREA mm^2	864.87
PERIMETER mm.	541.72
WEIGHT kg/m	2.335

PARTY'S NAME	GENERAL CATEGORY, COCHIN MARKET.
PARTY'S DRAWING No.	AS PER REQUIREMENT
ALLOY & TEMPER	HE9 WP
DESCRIPTION	TRANSPORT SECTION

DRAWING No.	SECTION No.
P–4625–1	–
6556	6556
24446	24446