P–18279–2
S5889
E0964
24586

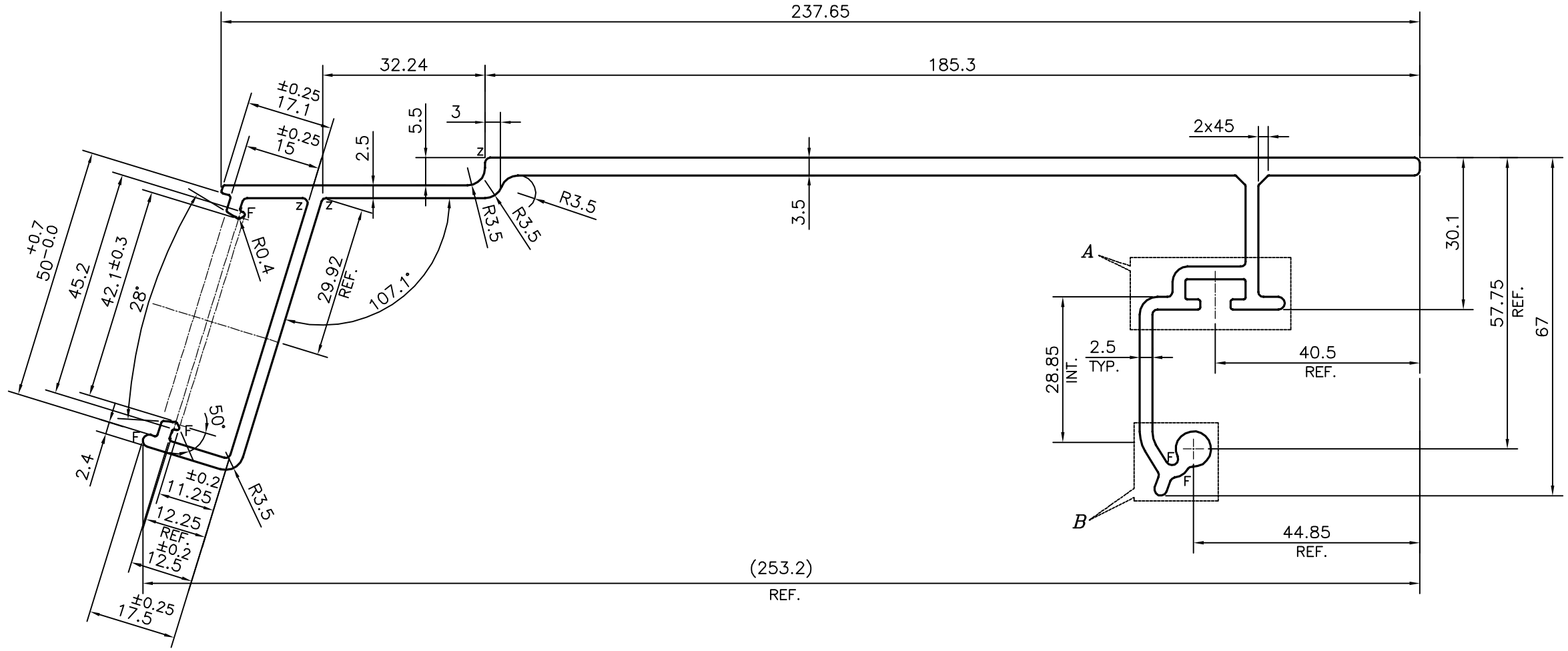

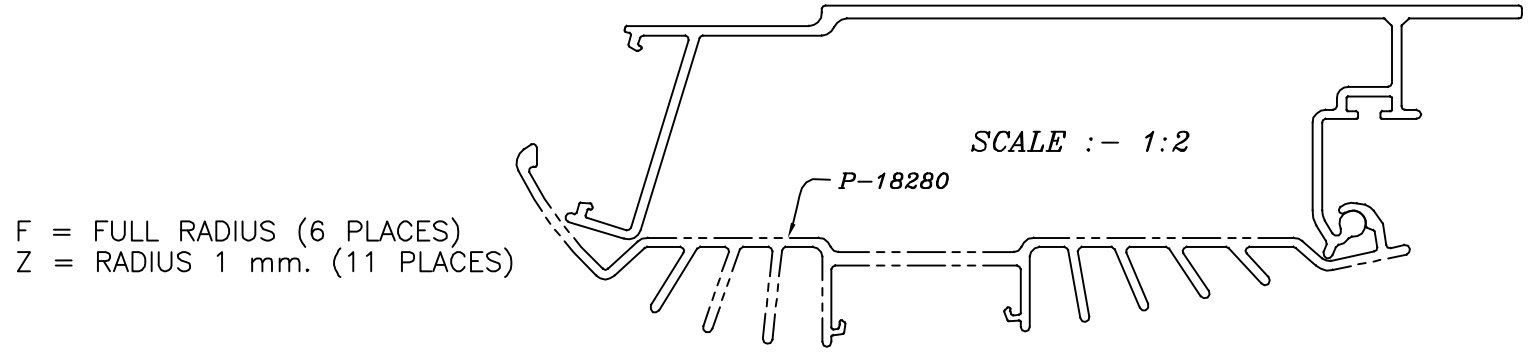

F = FULL RADIUS (6 PLACES)
Z = RADIUS 1 mm. (11 PLACES)

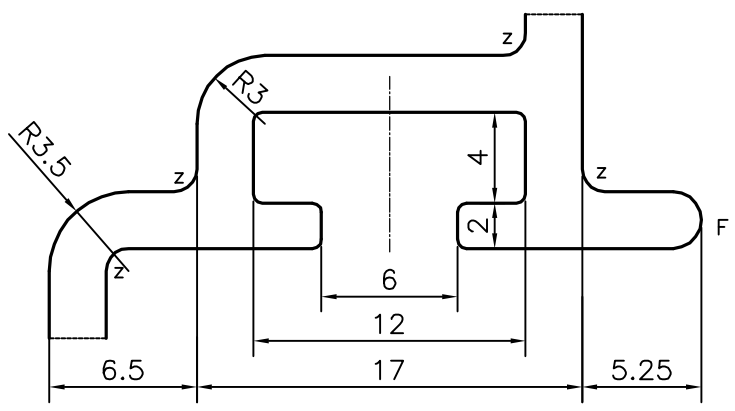

DETAIL OF "A"
SCALE 3:1

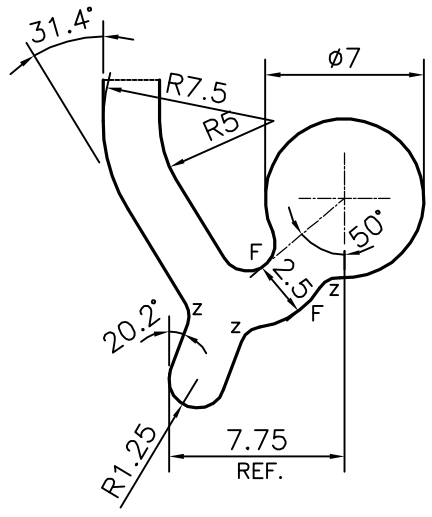

DETAIL OF "B"
SCALE 3:1

TOLERANCES ON OVERALL WIDTHS & WIDTHS ACROSS FLATS OF BARS, & REGULAR SECTIONS

UPTO 6.40mm – ±0.20	UPTO 32.0mm – ±0.38	UPTO 120.0mm – ±0.85	UPTO 320.00mm – ±1.70
UPTO 10.0mm – ±0.23	UPTO 50.0mm – ±0.46	UPTO 160.0mm – ±1.02	
UPTO 12.0mm – ±0.25	UPTO 60.0mm – ±0.53	UPTO 200.0mm – ±1.14	
UPTO 16.0mm – ±0.28	UPTO 80.0mm – ±0.69	UPTO 250.0mm – ±1.40	
UPTO 25.0mm – ±0.30	UPTO 100.0mm – ±0.75	UPTO 300.0mm – ±1.65	

JINDAL
SYMBOL OF QUALITY
AN ISO 9001 COMPANY

JINDAL ALUMINIUM LTD.
BANGALORE–560073 (INDIA)

	NAME	DATE
DRAWN	PARVESH	11–06–2018
CHECKED		
APPROVED	B.NATARAJA	15–06–2018

1. ALL DIMENSIONS ARE IN mm.
2. ROUND OFF ALL SHARP CORNERS WITH 0.40 mm.
3. TOLERANCES WILL BE AS PER IS:3965–1981 , UNLESS OTHERWISE SPECIFIED

SCALE	1:1
AREA mm^2	1297.126
PERIMETER mm.	865.063
WEIGHT kg/m	3.502

		DRAWING No.	SECTION No.
PARTY'S NAME	BFG INTERNATIONAL PVT. LTD., CHITOOR	P–18279–2	–
PARTY'S DRAWING No.	AS PER AUTOCAD DRAWING	S5889	S5889
ALLOY & TEMPER	6063 T6	E0964	E0964
DESCRIPTION	RAIL COACH SECTION	24586	24586