P–10490–1
S2758
24622

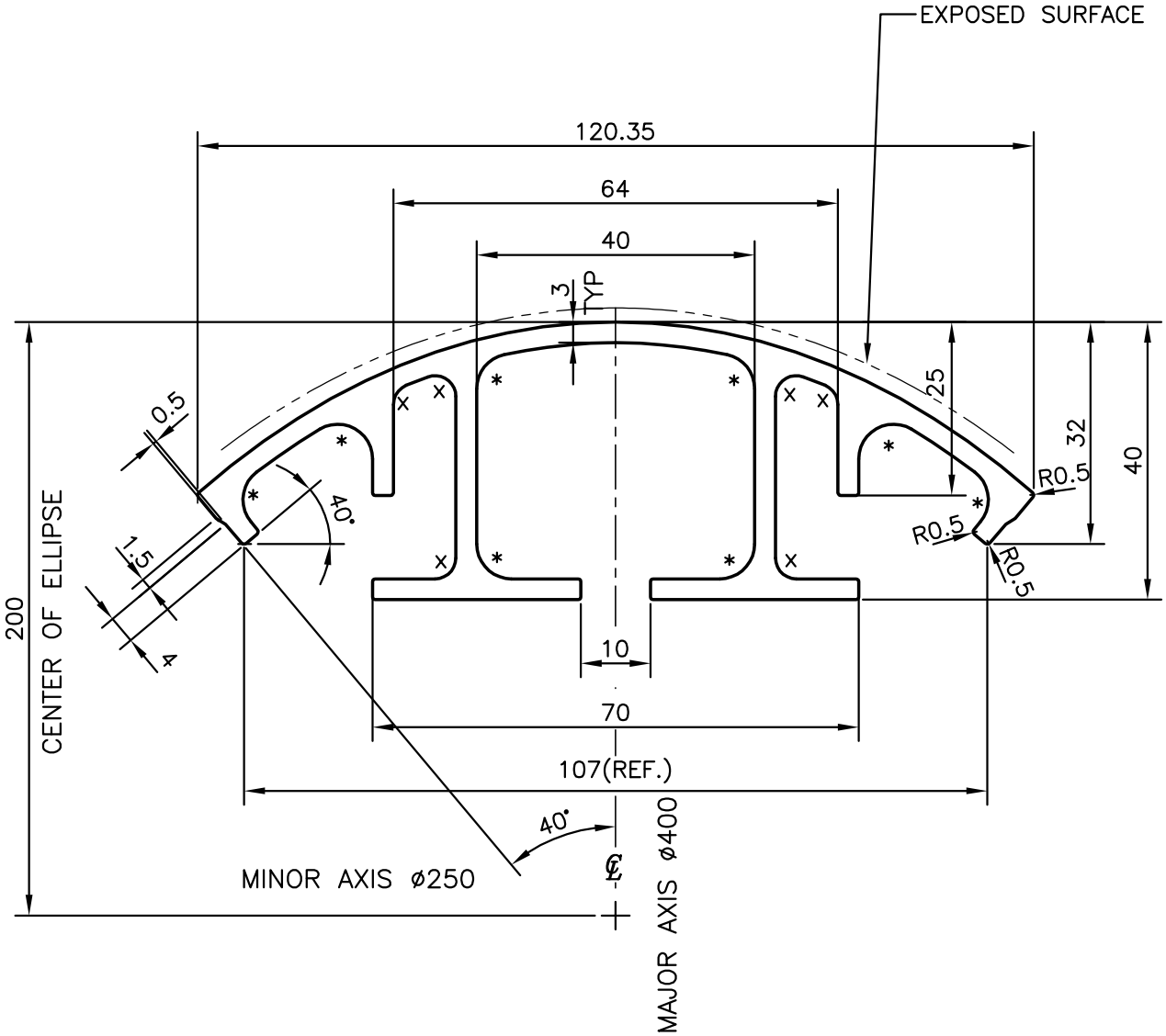

* = R 5 RADIUS (8 PLACES)
x = R 3 RADIUS (6 PLACES)

JINDAL SYMBOL OF QUALITY AN ISO 9001 COMPANY	*JINDAL ALUMINIUM LTD.* *BANGALORE–560073 (INDIA)*		NAME	DATE
		DRAWN	J.P.KAUSHIK	23–10–2010
		CHECKED		
		APPROVED	S.S.GARG	09–11–2010
1. ALL DIMENSIONS ARE IN mm. 2. ROUND OFF ALL SHARP CORNERS WITH 0.40 mm. 3. TOLERANCES WILL BE AS PER,IS:3965–1981 UNLESS OTHERWISE SPECIFIED		SCALE		1:1
		AREA mm^2		965.041
		PERIMETER mm.		559.86
		WEIGHT kg/m		2.606
PARTY'S NAME	DYNAMITIC TECHNOLOGIES LTD., BANGALORE	DRAWING No.		SECTION No.
PARTY'S DRAWING No.	AS PER DRAWING	P–10490–1		–
ALLOY & TEMPER	HE9 WP	S2758		S2758
		24622		24622
DESCRIPTION	MISC. SECTION			