7241	
24731	

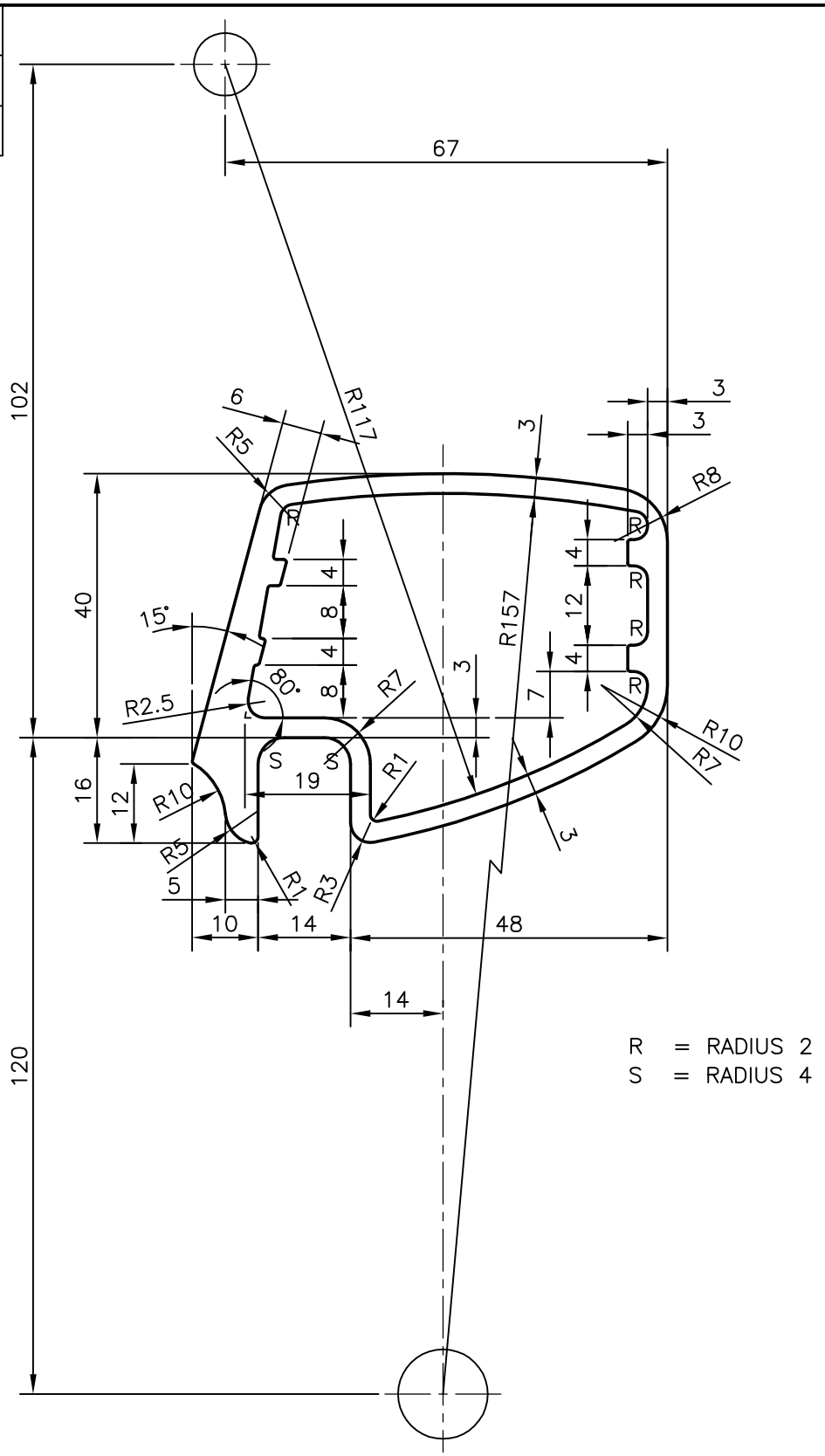

JINDAL SYMBOL OF QUALITY AN ISO 9002 COMPANY	*JINDAL ALUMINIUM LTD.* *BANGALORE–560073 (INDIA)*		NAME / DATE
		DRAWN	RAGHAVENDRA / 24–11–2006
		CHECKED	
		APPROVED	
1. ALL DIMENSIONS ARE IN mm. 2. ROUND OFF ALL SHARP CORNERS WITH 0.40 mm. 3. TOLERANCES WILL BE AS PER IS:6477–1983 UNLESS OTHERWISE SPECIFIED		SCALE	1:1
		AREA mm^2	823.3
		PERIMETER mm.	244.081
		WEIGHT kg/m	2.223
PARTY'S NAME	HONEST TRADING CO. PVT. LTD., BILIMORA	DRAWING No.	SECTION No.
PARTY'S DRAWING No.	HSC–005	7241	–
ALLOY & TEMPER	HE9 WP	24731	24731
DESCRIPTION	REED CAP SECTION		