P–7799–2
24791

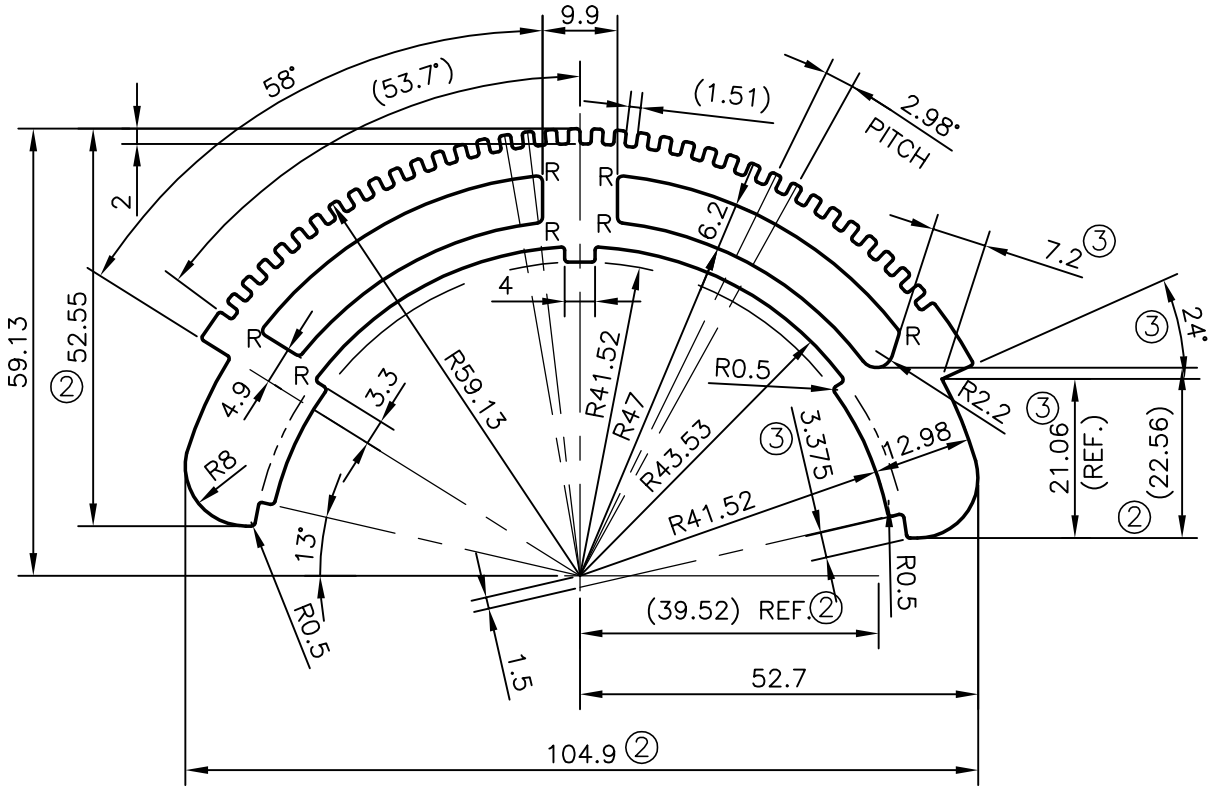

ISSUE–2 R = R0.75 mm (7 PLACES)

DIMENSION CHANGED FROM 37 TO 39.52,104 TO 104.90, 4.9 TO 7.3, 20.36 TO 22.56 & 51.95 TO 52.55.

WEIGHT ALSO CHANGED FROM 3.940 kg/M TO 4.071 kg/M

ISSUE–3

DIMENSION CHANGED FROM 7.3 TO 7.2 mm & ANGLE CHANGED FROM 72° TO 24°

DIMENSION CHANGED FROM 4.975 mm TO 3.375 mm DIMENSIONS ADDED 21.06 (REF.)

WEIGHT ALSO CHANGED FROM 4.071 kg/M TO 4.106 kg/M

JINDAL SYMBOL OF QUALITY AN ISO 9001 COMPANY	*JINDAL ALUMINIUM LTD.* *BANGALORE–560073 (INDIA)*		NAME	DATE
		DRAWN	J.P.KAUSHIK	24–12–2010
		CHECKED		
		APPROVED	S.S.GARG	19–01–2011
1. ALL DIMENSIONS ARE IN mm. 2. ROUND OFF ALL SHARP CORNERS WITH 0.40 mm. 3. TOLERANCES WILL BE AS PER IS:6477–1983 UNLESS OTHERWISE SPECIFIED		SCALE		1:1
		AREA mm^2		1520.674
		PERIMETER mm.		439.85
PARTY'S NAME	TEX–TECH INDUSTRIES (INDIA) PVT. LTD., COIMBATORE	WEIGHT kg/m		4.106
		DRAWING No.		SECTION No.
PARTY'S DRAWING No.	AS PER DRAWING & AS PER CUSTOMER REQUIREMENT	P–7799–2		–
ALLOY & TEMPER	HE9 WP	24791		24791(ISSUE–3)
DESCRIPTION	TEXTILE M/C RY SECTION			