P–11646–2
S3256
24835

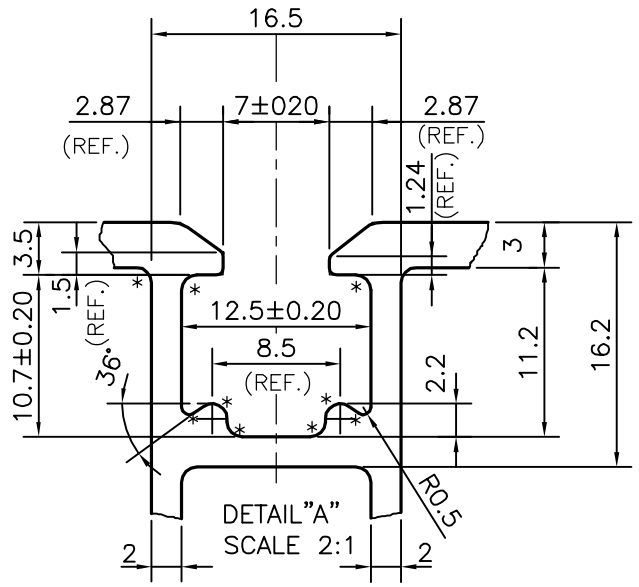

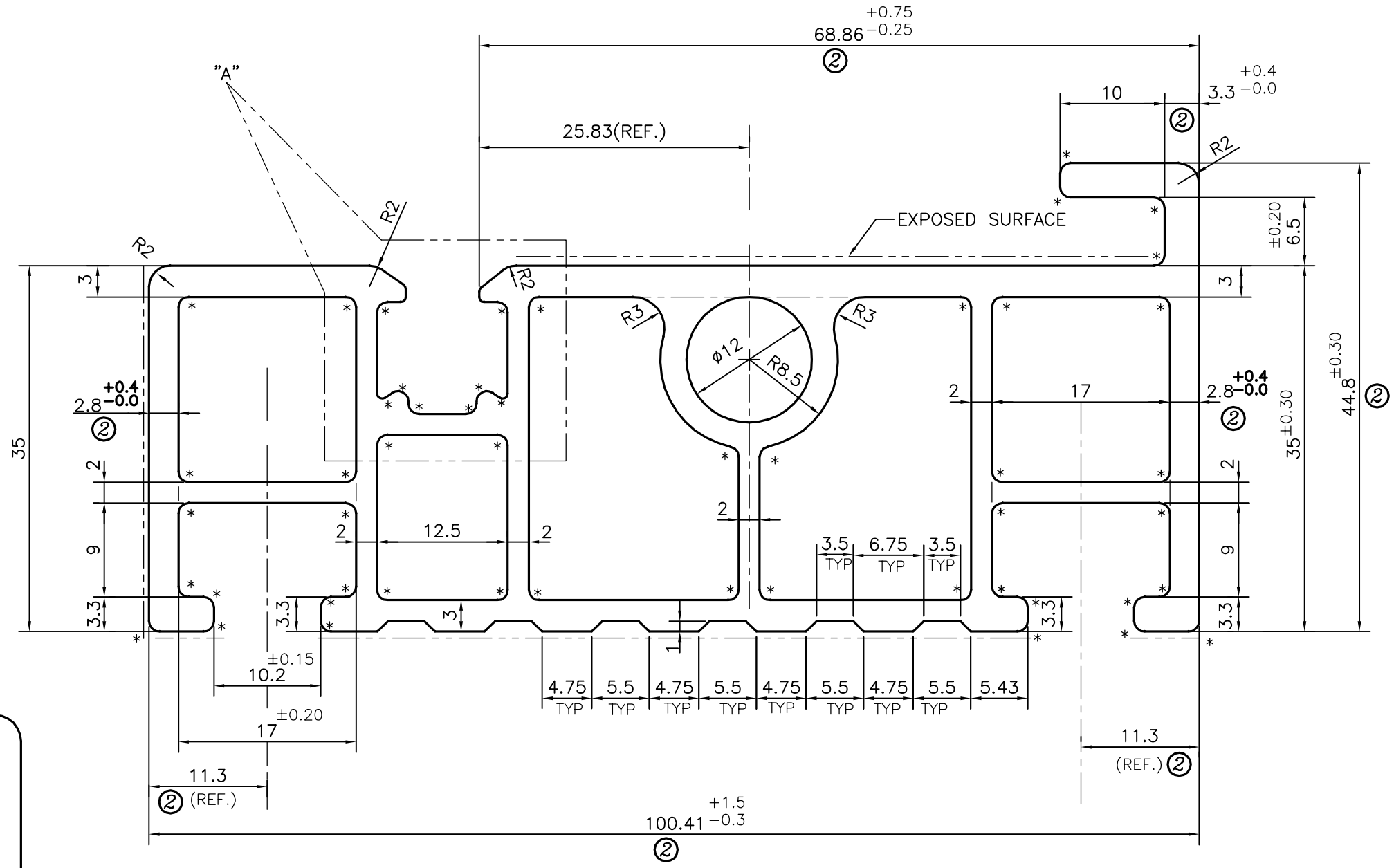

② **ISSUE 2 :–**

DIMENSION CHANGED FROM 2.5 TO 2.8 $^{+0.4}_{-0.0}$,
DIMENSION CHANGED FROM 99.81 TO 100.41,
DIMENSION CHANGED FROM 11.0 TO 11.3,
DIMENSION CHANGED FROM 44.5 TO 44.8,
DIMENSION CHANGED FROM 3.0 TO 3.3,
DIMENSION CHANGED FROM 68.56 TO 68.86.
TWIST = 0.5 mm./METRE
BEND = 1 mm./METRE

* = RADIUS 1 (48 PLACES)

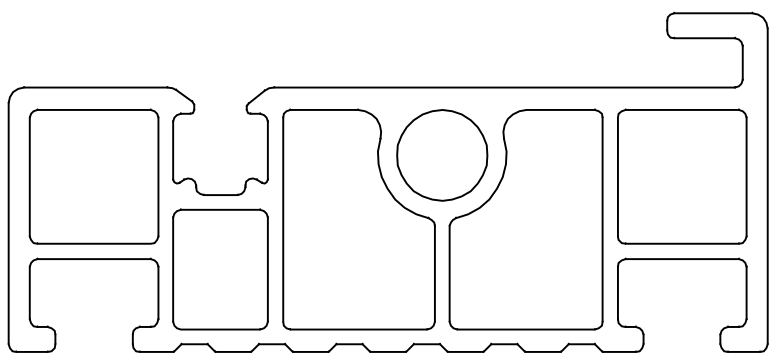

SCALE :– 1:1

JINDAL SYMBOL OF QUALITY AN ISO 9001 COMPANY	*JINDAL ALUMINIUM LTD.* *BANGALORE–560073 (INDIA)*		NAME	DATE
		DRAWN	*PARVESH*	13–06–2012
		CHECKED		
		APPROVED	S.S.GARG	20–06–2012
1. ALL DIMENSIONS ARE IN mm. 2. ROUND OFF ALL SHARP CORNERS WITH 0.40 mm. 3. TOLERANCES WILL BE AS PER IS:6477–1983, UNLESS OTHERWISE SPECIFIED		SCALE		2:1
		AREA mm^2		1134.406
		PERIMETER mm.		415.471
		WEIGHT kg/m		3.063
PARTY'S NAME	SIEGER SPINTECH EQUIPMENTS PVT. LTD., COIMBATORE	DRAWING No.		SECTION No.
PARTY'S DRAWING No.	AS PER CAD DRAWING	P–11646–2		–
ALLOY & TEMPER	6063 T6	S3256		S3256(ISSUE–2)
DESCRIPTION	DORFING ARM	24835		24835