P−11744
S3269
X1605
24845

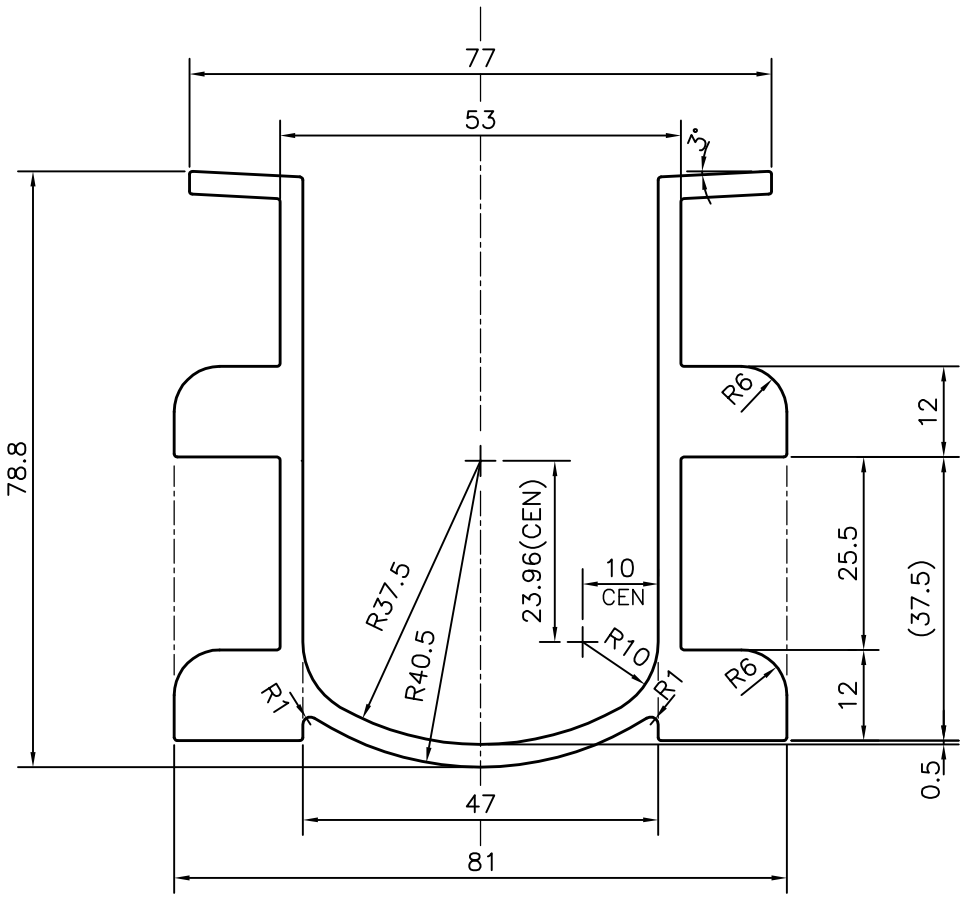

JINDAL SYMBOL OF QUALITY AN ISO 9001 COMPANY	*JINDAL ALUMINIUM LTD.* *BANGALORE−560073 (INDIA)*		NAME	DATE
		DRAWN	J.P.KAUSHIK	07−05−2012
		CHECKED		
		APPROVED	*B.NATARAJ*	12−05−2012
1. ALL DIMENSIONS ARE IN mm. 2. ROUND OFF ALL SHARP CORNERS WITH 0.40 mm. 3. TOLERANCES WILL BE AS PER,IS:3965−1981 UNLESS OTHERWISE SPECIFIED		SCALE		1:1
		AREA mm^2		1323.702
		PERIMETER mm.		545.387
PARTY'S NAME	SANMIT CARD CLOTHING INDIA PVT. LTD., COIMBATORE	WEIGHT kg/m		3.574
		DRAWING No.		SECTION No.
PARTY'S DRAWING No.	SANMIT−SD−393	P−11744		−
		S3269		S3269
ALLOY & TEMPER	63400 WP	X1605		X1605
		24845		24845
DESCRIPTION	TEXTILE SECTION			