P−16811−3
24893

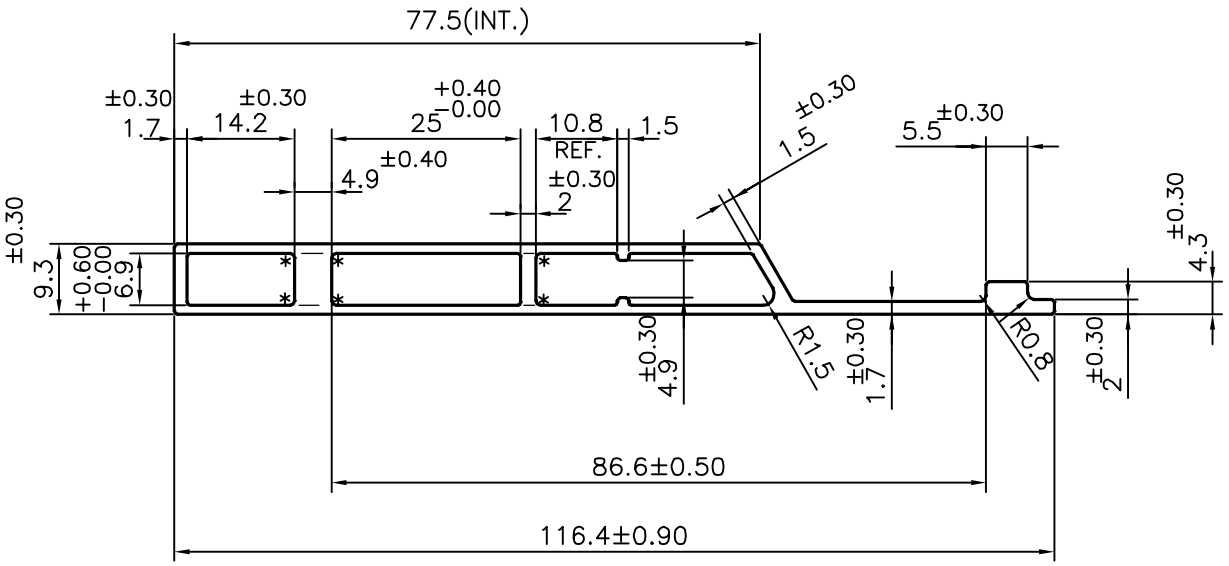

* = RADIUS 0.60 (6 PLACES)

JINDAL SYMBOL OF QUALITY AN ISO 9001 COMPANY	*JINDAL ALUMINIUM LTD.* *BANGALORE−560073 (INDIA)*		NAME	DATE
		DRAWN	J.P.KAUSHIK	19−04−2017
		CHECKED		
		APPROVED	*B.NATARAJA*	22−04−2017
1. ALL DIMENSIONS ARE IN mm. 2. ROUND OFF ALL SHARP CORNERS WITH 0.40 mm. 3. TOLERANCES WILL BE AS PER IS:6477−1983 UNLESS OTHERWISE SPECIFIED		SCALE		1:1
		AREA mm^2		342.14
		PERIMETER mm.		251.585
PARTY'S NAME	GENERAL CATEGORY, AHMEDABAD MARKET	WEIGHT kg/m		0.924
		DRAWING No.		SECTION No.
PARTY'S DRAWING No.	AS PER DRAWING	P−16811−3		−
		24893		24893
ALLOY & TEMPER	HE9 WP			
DESCRIPTION	TEXTILE SECTION			