| |
|---|
| P–10145 |
| S2583 |
| 25203 |

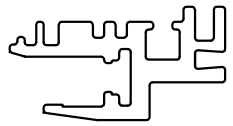

1:1

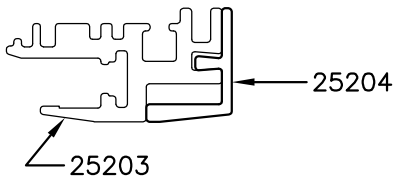


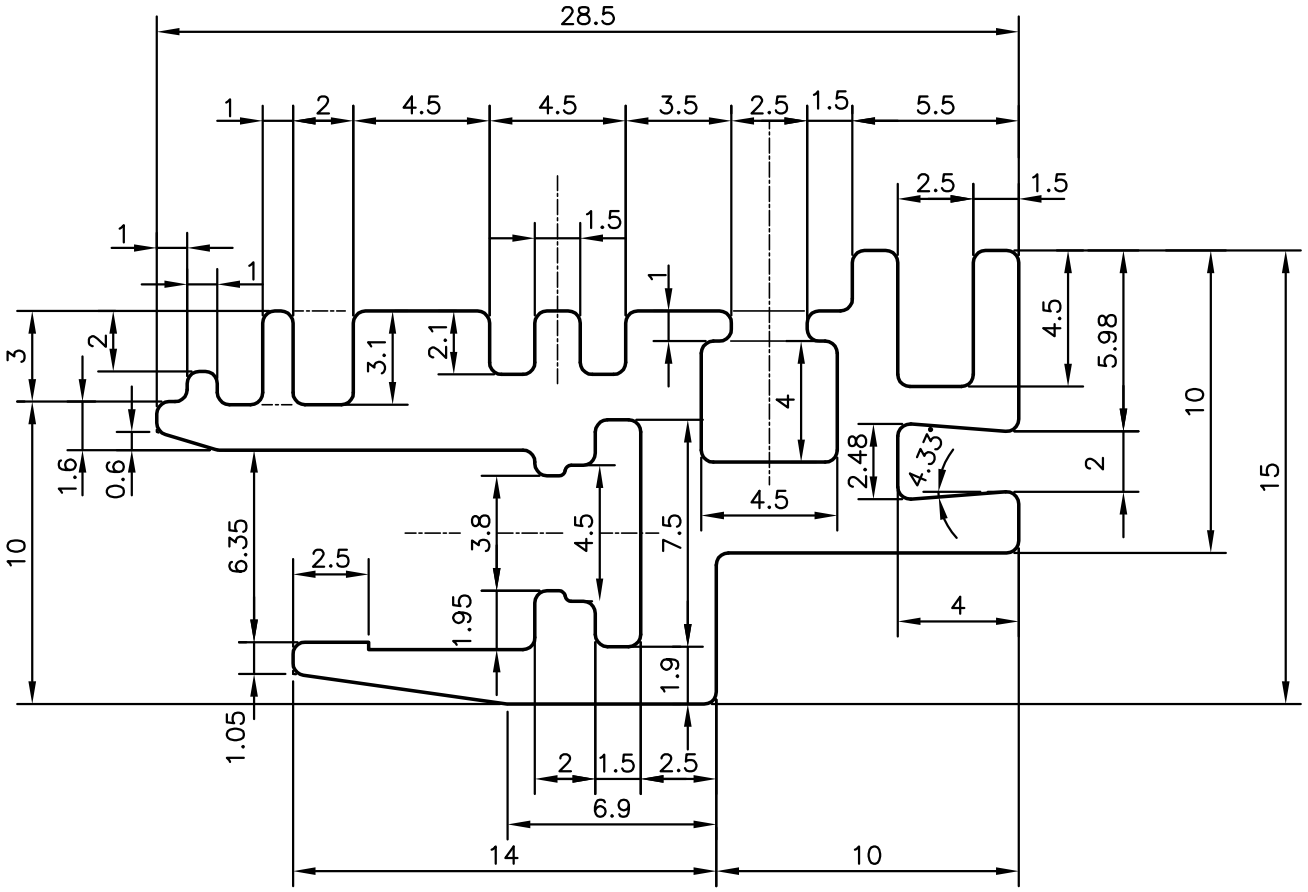


| | | | | |
|---|---|---|---|---|
| JINDAL<br>SYMBOL OF QUALITY<br>AN ISO 9001 COMPANY | *JINDAL ALUMINIUM LTD.*<br>*BANGALORE–560073 (INDIA)* | | NAME | DATE |
| | | DRAWN | J.P.KAUSHIK | 29–06–2010 |
| | | CHECKED | | |
| | | APPROVED | S.S.GARG | 12–07–2010 |
| 1. ALL DIMENSIONS ARE IN mm.<br>2. ROUND OFF ALL SHARP CORNERS WITH 0.40 mm.<br>3. TOLERANCES WILL BE AS PER BS:EN–12020–2 UNLESS OTHERWISE SPECIFIED | | SCALE | | 4:1 |
| | | AREA $mm^2$ | | 154.855 |
| | | PERIMETER mm. | | 155.284 |
| | | WEIGHT kg/m | | 0.418 |
| PARTY'S NAME | SWAN ELECTRIC ENGINEERING CO.PVT.LTD., CHENNAI | DRAWING No. | | SECTION No. |
| PARTY'S DRAWING No. | SW10009–07 REV.2– PART–1 | P–10145 | | – |
| ALLOY & TEMPER | HE9 WP | S2583 | | S2583 |
| | | 25203 | | 25203 |
| DESCRIPTION | ELECTRICAL SECTION | | | |