P–11483–1
S3161
25216

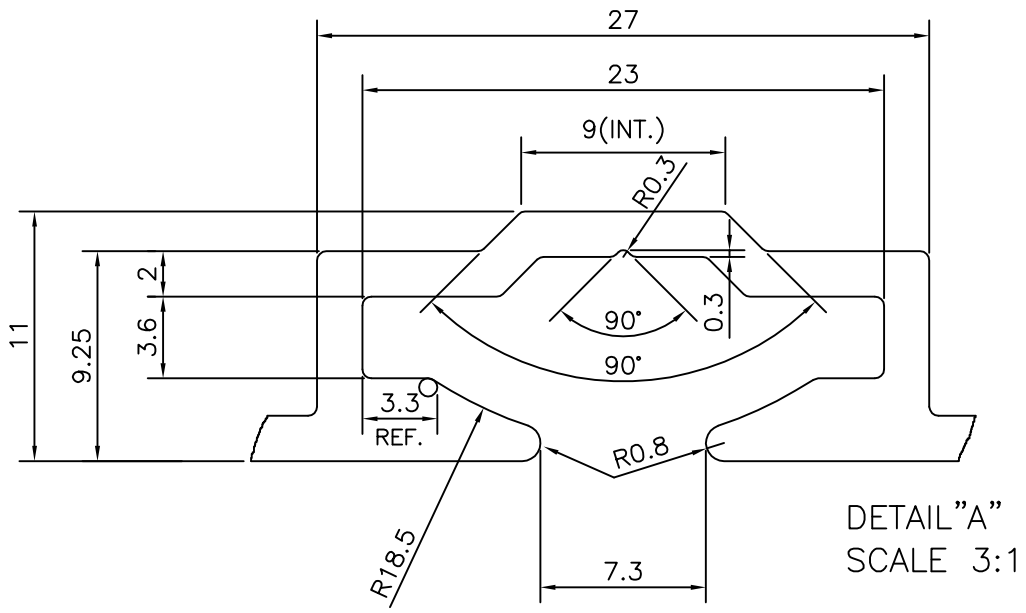

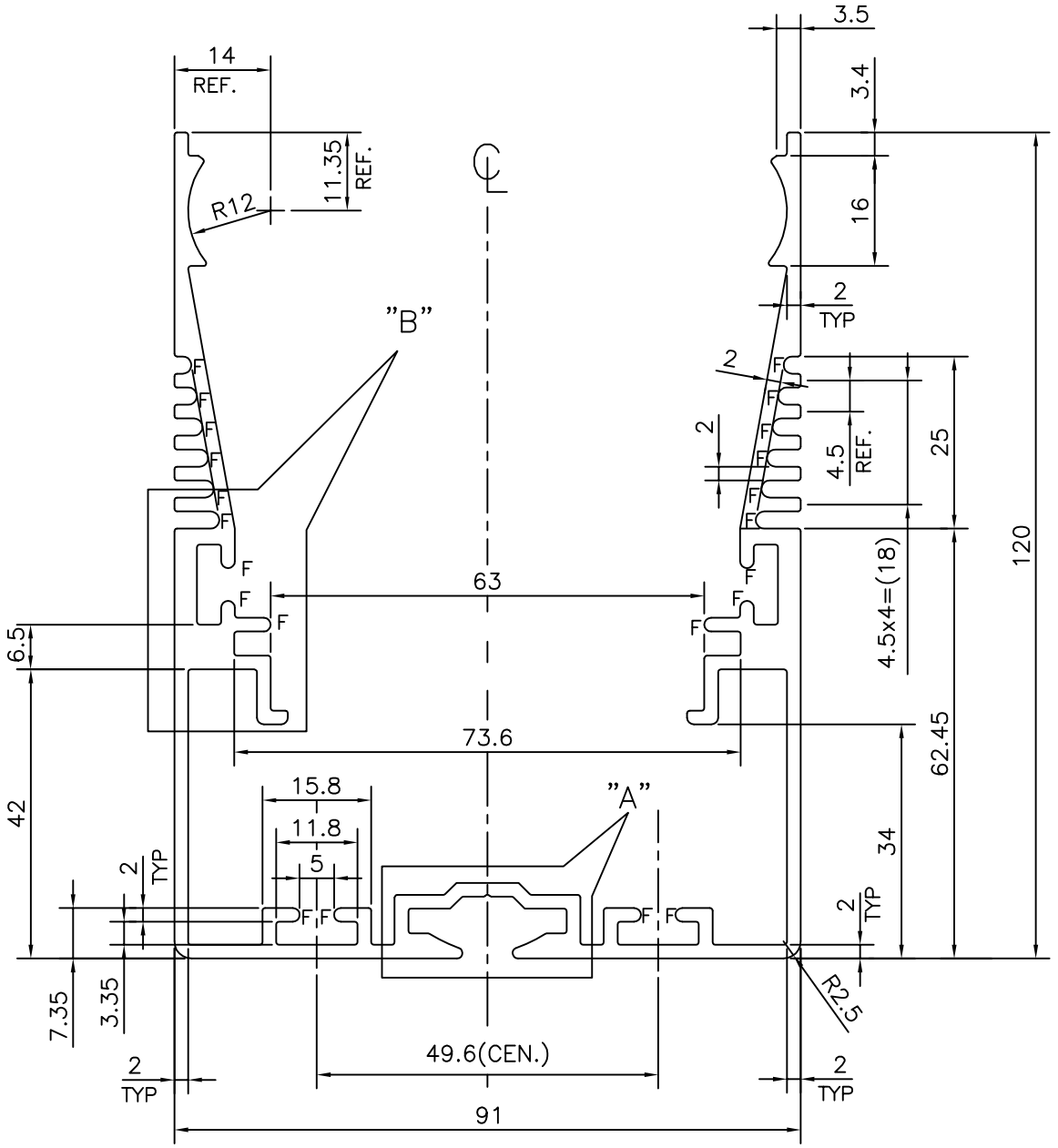

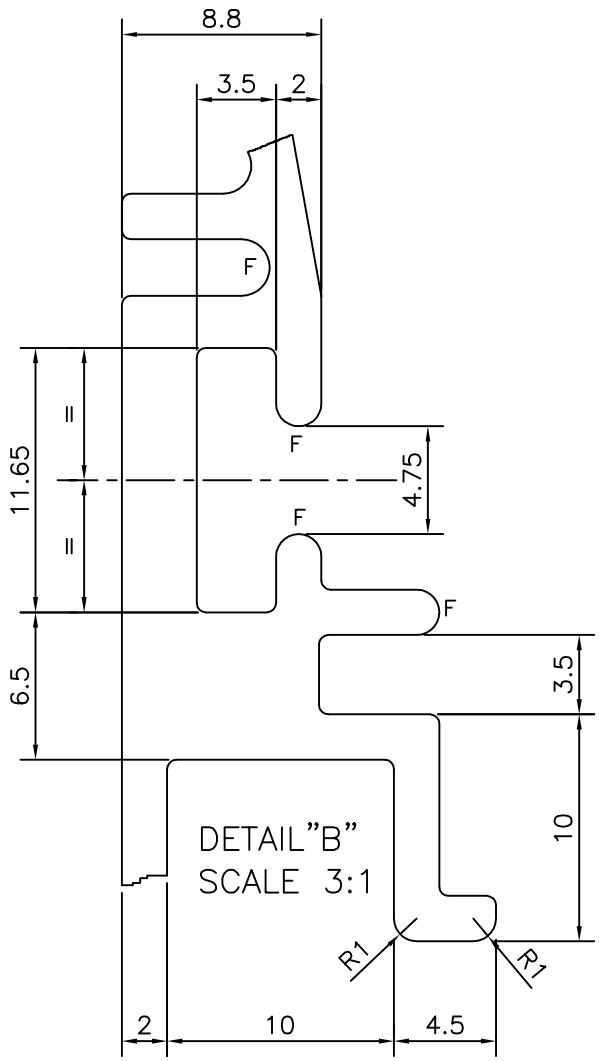

F = FULL RADIUS (22 PLACES)

JINDAL
SYMBOL OF QUALITY
AN ISO 9001 COMPANY

JINDAL ALUMINIUM LTD.
BANGALORE–560073 (INDIA)

1. ALL DIMENSIONS ARE IN mm.
2. ROUND OFF ALL SHARP CORNERS WITH 0.40 mm.
3. TOLERANCES WILL BE AS PER IS:3965–1981 UNLESS OTHERWISE SPECIFIED

		NAME	DATE
DRAWN		J.P.KAUSHIK	23–01–2012
CHECKED			
APPROVED		S.S.GARG	25–01–2012
SCALE			1:1
AREA mm^2			1212.175
PERIMETER mm.			1014.485
WEIGHT kg/m			3.273
PARTY'S NAME	BHAGYASHRI ELECTRICALS, BANGALORE	DRAWING No.	SECTION No.
PARTY'S DRAWING No.	AS PER SAMPLE	P–11483–1	–
ALLOY & TEMPER	6063 T6	S3161	S3161
DESCRIPTION	ELECTRICAL SECTION	25216	25216