P–12678
S3720
25288

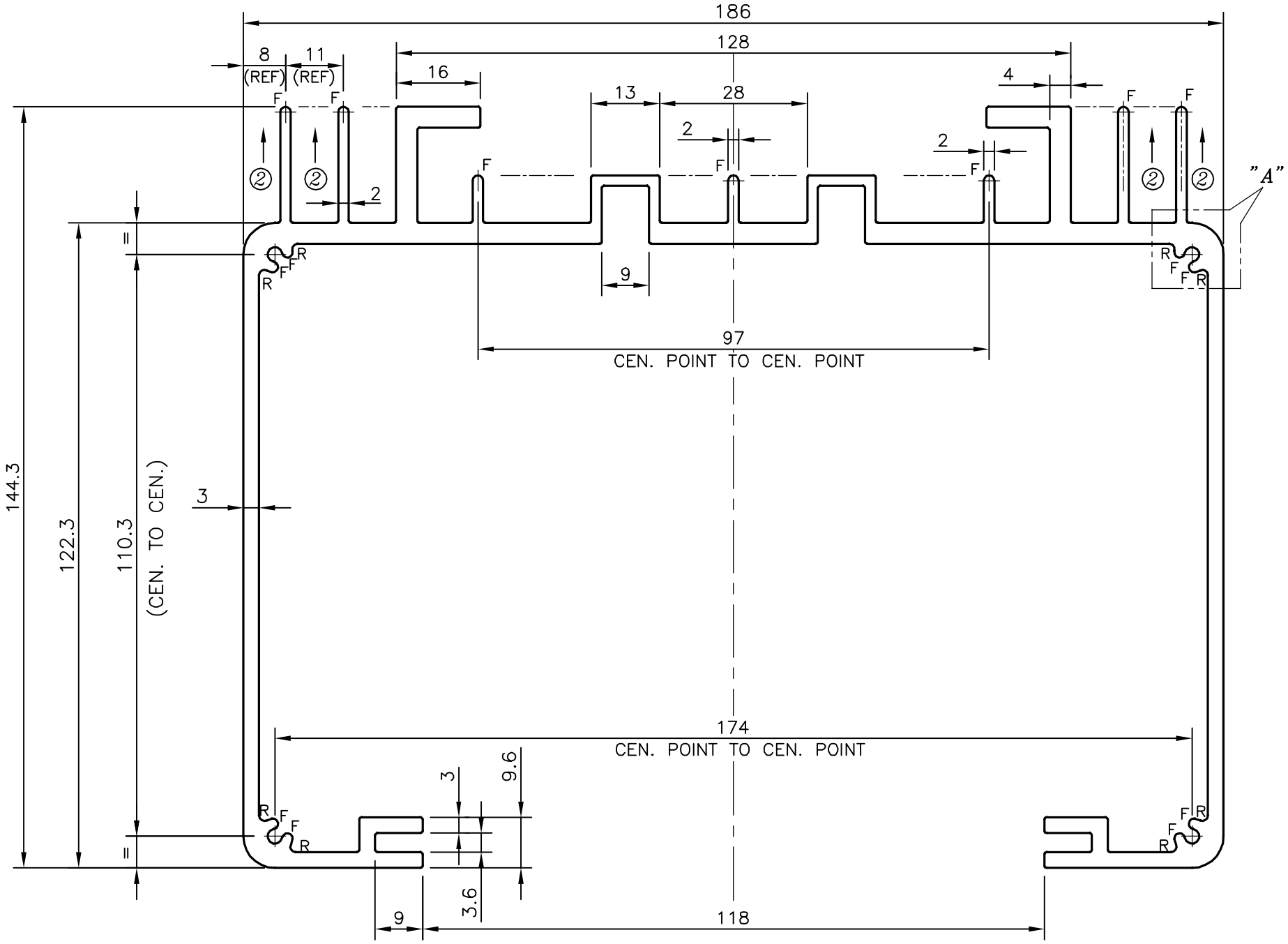

F = FULL RADIUS (15 PLACES)
R = 1 mm RADIUS (8 PLACES)

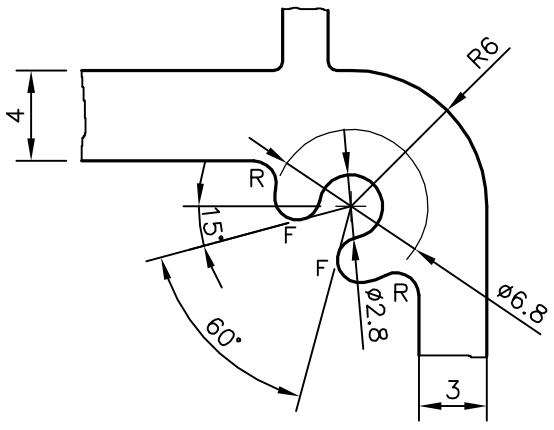

DETAILS OF "A"
SCALE 3:1

ISSUE (2) :–

- *HEIGHT INCREASED AT 4 PLACES UP TO TOP OF THE SECTION.*
- *DIMENSION 9mm. REMOVED.*
- *WEIGHT ALSO CHANGED FROM 6.001 Kg/M TO 6.281 Kg/M.*

TOLERANCES ON OVERALL WIDTHS & WIDTHS ACROSS FLATS OF BARS, & REGULAR SECTIONS			
UPTO 6.40mm – ±0.20	UPTO 32.0mm – ±0.38	UPTO 120.0mm – ±0.85	UPTO 320.00mm – ±1.70
UPTO 10.0mm – ±0.23	UPTO 50.0mm – ±0.46	UPTO 160.0mm – ±1.02	
UPTO 12.0mm – ±0.25	UPTO 60.0mm – ±0.53	UPTO 200.0mm – ±1.14	
UPTO 16.0mm – ±0.28	UPTO 80.0mm – ±0.69	UPTO 250.0mm – ±1.40	
UPTO 25.0mm – ±0.30	UPTO 100.0mm – ±0.75	UPTO 300.0mm – ±1.65	

JINDAL
SYMBOL OF QUALITY
AN ISO 9001 COMPANY

JINDAL ALUMINIUM LTD.
BANGALORE–560073 (INDIA)

1. ALL DIMENSIONS ARE IN mm.
2. ROUND OFF ALL SHARP CORNERS WITH 0.40 mm.
3. TOLERANCES WILL BE AS PER IS:3965–1981 ,UNLESS OTHERWISE SPECIFIED

	NAME	DATE
DRAWN	*PARVESH*	17–08–2013
CHECKED		
APPROVED	S.S.GARG	29–08–2013
SCALE		1:1
AREA mm^2		2326.451
PERIMETER mm.		1477.361
WEIGHT kg/m		6.281

PARTY'S NAME	ELECTRONIC CONTROLS & DISCHARGE SYSTEMS PVT. LTD., KOCHI
PARTY'S DRAWING No.	ECL 030 022 2
ALLOY & TEMPER	6060 T5
DESCRIPTION	ELECTRICAL SECTION

DRAWING No.	SECTION No.
P–12678	–
S3720	S3720(ISSUE–2)
25288	25288