P−14279
S4331
25308

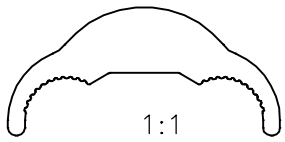

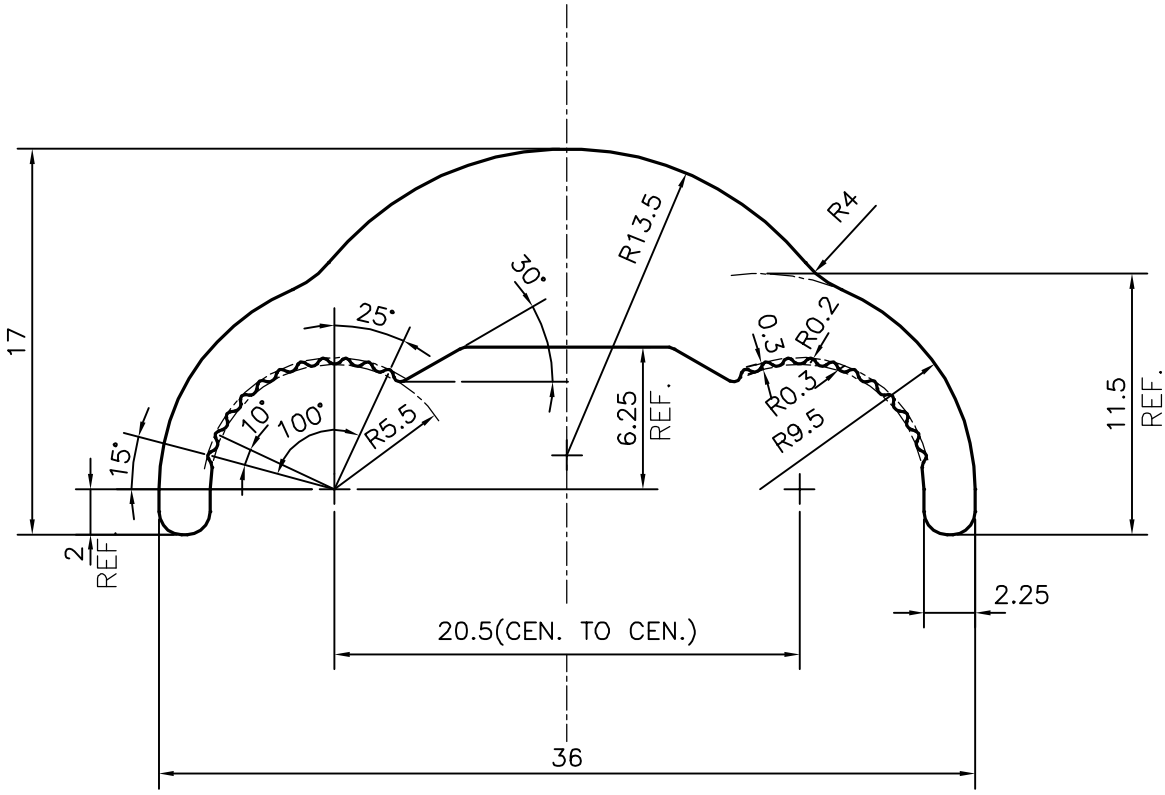

			NAME	DATE
JINDAL SYMBOL OF QUALITY AN ISO 9001 COMPANY	*JINDAL ALUMINIUM LTD.* *BANGALORE−560073 (INDIA)*	DRAWN	*J.P.KAUSHIK*	22−12−2014
		CHECKED		
		APPROVED	S.S.GARG	27−12−2014

1. ALL DIMENSIONS ARE IN mm.
2. ROUND OFF ALL SHARP CORNERS WITH 0.50 mm.
3. TOLERANCES WILL BE AS PER IS:3965−1981 , UNLESS OTHERWISE SPECIFIED

SCALE	3:1
AREA mm^2	227.424
PERIMETER mm.	105.419
WEIGHT kg/m	0.614

PARTY'S NAME	SICAME INDIA CONNECTORS PVT. LTD., KANCHIPURAM
PARTY'S DRAWING No.	AS PER AUTOCAD DRAWING & F10086312 B
ALLOY & TEMPER	6005 T6
DESCRIPTION	INDUSTRIAL SECTION−BEARING PLATE

DRAWING No.	SECTION No.
P−14279	−
S4331	S4331
25308	25308