P-14634
S4463
25325

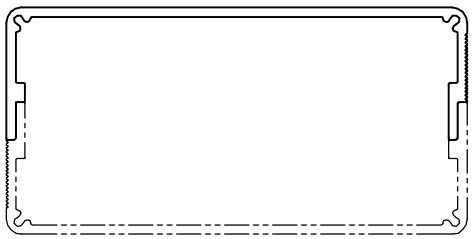

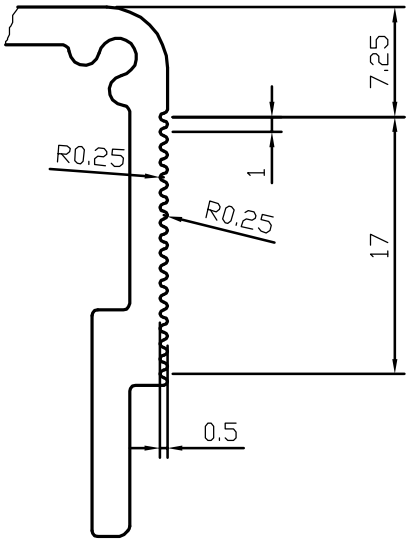

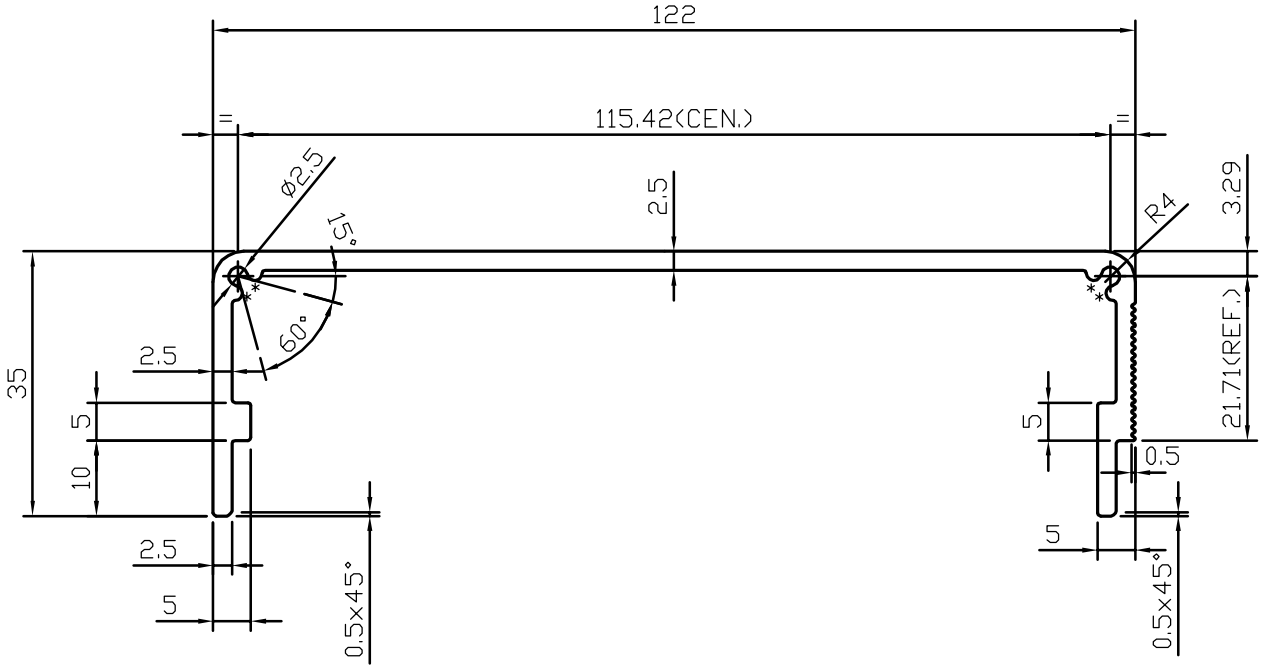

*= 1.0 RADIUS (4 PLASES)

JINDAL SYMBOL OF QUALITY AN ISO 9002 COMPANY	*JINDAL ALUMINIUM LTD.* *BANGALORE-560073 (INDIA)*		NAME	DATE
		DRAWN	J.P.KAUSHIK	08-05-2015
		CHECKED		
		APPROVED	S.S.GARG	12-05-2015
1. ALL DIMENSIONS ARE IN mm. 2. ROUND OFF ALL SHARP CORNERS WITH 0.40 mm. 3. TOLERANCES WILL BE AS PER IS:3965-1981 UNLESS OTHERWISE SPECIFIED		SCALE		1:1
		AREA mm^2		487.742
		PERIMETER mm.		400.81
		WEIGHT kg/m		1.317
PARTY'S NAME	GALLANT ELECTRONIC CONTROLS,BANGALORE	DRAWING No.		SECTION No.
PARTY'S DRAWING No.	MODIFICATION OF SECTION No:-33521	P-14634		-
ALLOY & TEMPER	6063 T6	S4463		S4463
		25325		25325
DESCRIPTION	HEAT SINK			