P−15339
S4761
25347

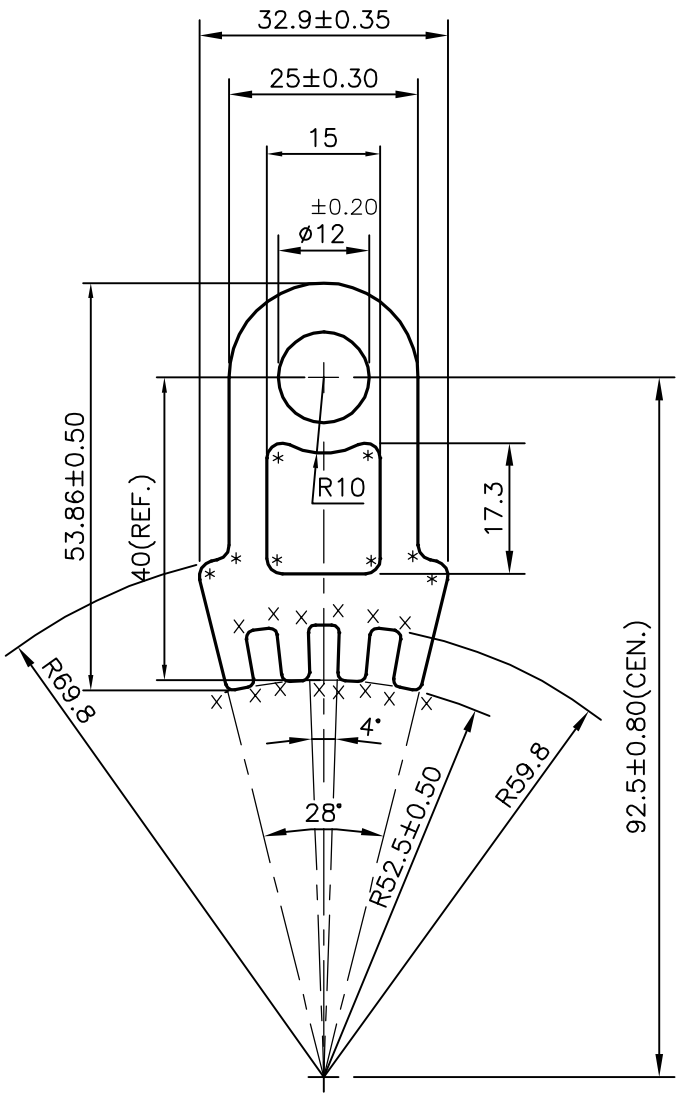

x = 1.0 RADIUS(14 PLACES)
* = 2.0 RADIUS (8 PLACES)

JINDAL SYMBOL OF QUALITY AN ISO 9001 COMPANY	*JINDAL ALUMINIUM LTD.* *BANGALORE−560073 (INDIA)*		NAME	DATE
		DRAWN	J.P.KAUSHIK	23−11−2015
		CHECKED		
		APPROVED	S.S.GARG	09−12−2015
1. ALL DIMENSIONS ARE IN mm. 2. ROUND OFF ALL SHARP CORNERS WITH 0.40 mm. 3. TOLERANCES WILL BE AS PER IS:6477−1983 UNLESS OTHERWISE SPECIFIED		SCALE		1:1
		AREA mm^2		892.258
		PERIMETER mm.		192.645
PARTY'S NAME	IEEC POWER ELECTRONICS PVT. LTD., MUMBAI	WEIGHT kg/m		2.409
		DRAWING No.		SECTION No.
PARTY'S DRAWING No.	A−6320−02	P−15339		−
ALLOY & TEMPER	6063 T6	S4761		S4761
		25347		25347
DESCRIPTION	100 ROLLER 4 FIN ELECTRODE PROFILE			