P-15610
S4855
25353

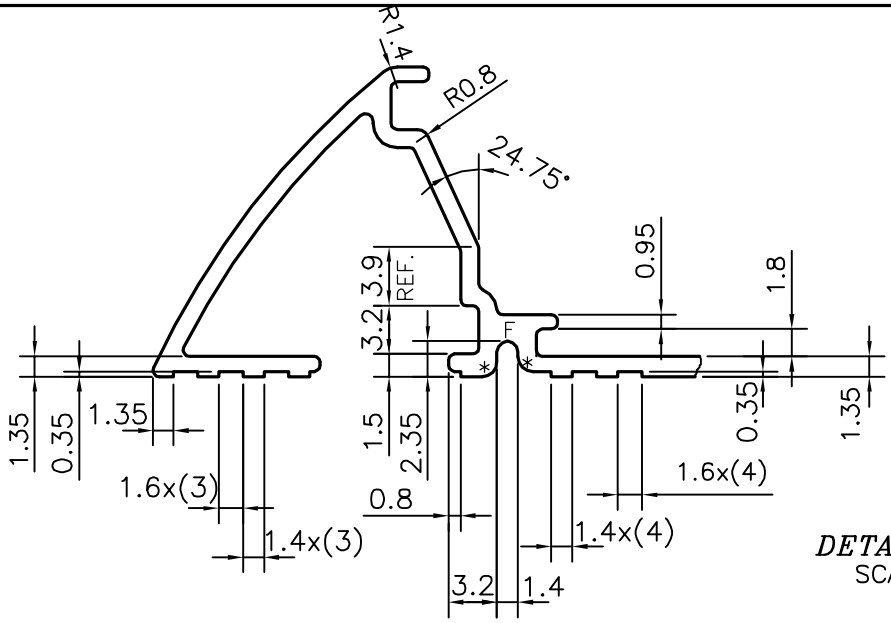

DETAIL OF "A"
SCALE 2:1

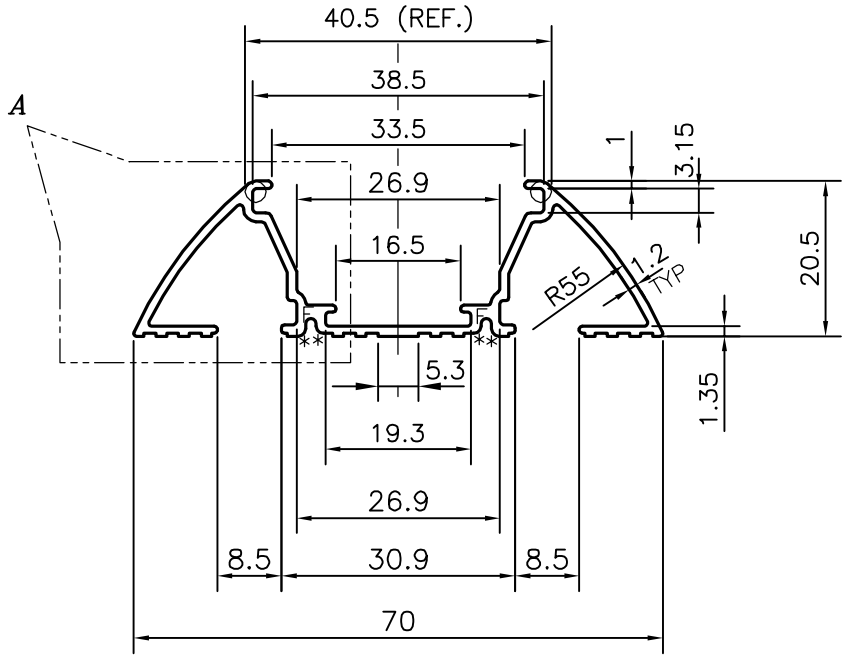

F = FULL RADIUS (2 PLACES)
* = 1.0 RADIUS (4 PLACES)

JINDAL SYMBOL OF QUALITY AN ISO 9001 COMPANY	*JINDAL ALUMINIUM LTD.* *BANGALORE-560073 (INDIA)*		NAME	DATE
		DRAWN	J.P.KAUSHIK	19-02-2016
		CHECKED		
		APPROVED	S.S.GARG	23-02-2016

1. ALL DIMENSIONS ARE IN mm.
2. ROUND OFF ALL SHARP CORNERS WITH 0.40 mm.
3. TOLERANCES WILL BE AS PER IS:3965-1981, UNLESS OTHERWISE SPECIFIED

SCALE	1:1
AREA mm^2	185.54
PERIMETER mm.	306.307
WEIGHT kg/m	0.501

PARTY'S NAME	ARKA TECHNOLOGIES PVT. LTD., BANGALORE
PARTY'S DRAWING No.	MODIFIED OF SECTION No:-S4823
ALLOY & TEMPER	6063 T6
DESCRIPTION	LED LIGHT SECTION

DRAWING No.	SECTION No.
P-15610	–
S4855	S4855
25353	25353