P−18775
S6020
25381

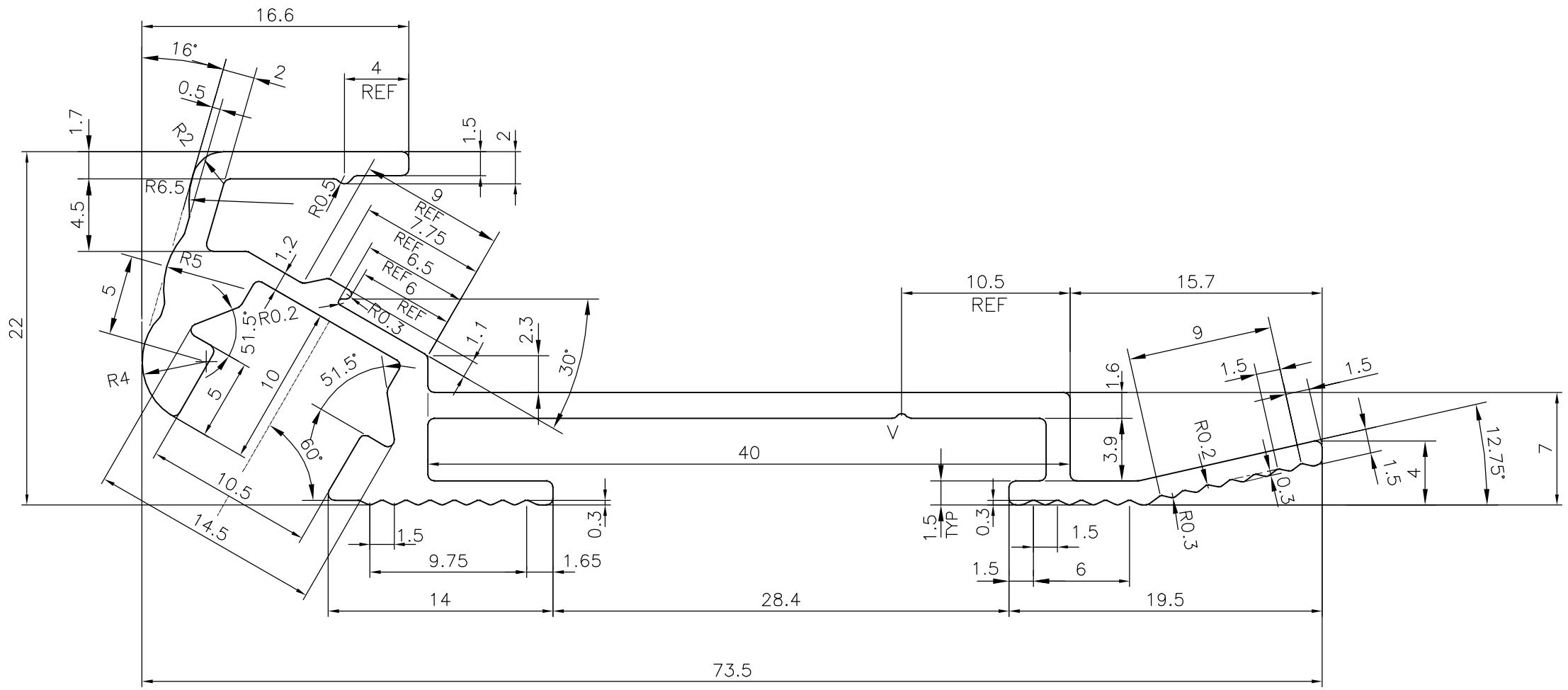

V = V GROOVE 0.3x90° (2 PLACES)

TOLERANCES ON OVERALL WIDTHS & WIDTHS ACROSS FLATS OF BARS, & REGULAR SECTIONS			
UPTO 6.40mm − ±0.20 UPTO 10.0mm − ±0.23 UPTO 12.0mm − ±0.25 UPTO 16.0mm − ±0.28 UPTO 25.0mm − ±0.30	UPTO 32.0mm − ±0.38 UPTO 50.0mm − ±0.46 UPTO 60.0mm − ±0.53 UPTO 80.0mm − ±0.69 UPTO 100.0mm − ±0.75	UPTO 120.0mm − ±0.85 UPTO 160.0mm − ±1.02 UPTO 200.0mm − ±1.14 UPTO 250.0mm − ±1.40 UPTO 300.0mm − ±1.65	UPTO 320.00mm − ±1.70

JINDAL

SYMBOL OF QUALITY
AN ISO 9001 COMPANY

JINDAL ALUMINIUM LTD.

BANGALORE−560073 (INDIA)

	NAME	DATE
DRAWN	J.P.KAUSHIK	17−10−2018
CHECKED		
APPROVED	B.NATARAJA	27−10−2018

1. ALL DIMENSIONS ARE IN mm.
2. ROUND OFF ALL SHARP CORNERS WITH 0.40 mm.
3. TOLERANCES WILL BE AS PER IS:3965−1981 , UNLESS OTHERWISE SPECIFIED

SCALE	3:1
AREA mm^2	224.574
PERIMETER mm.	258.747
WEIGHT kg/m	0.606
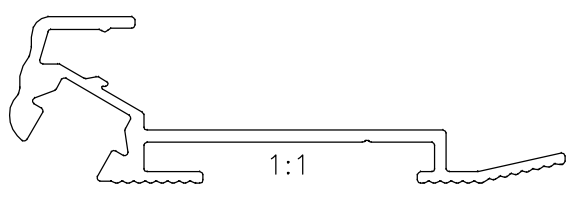
		DRAWING No.	SECTION No.
PARTY'S NAME	ECOLIGHTING, NEW DELHI	P−18775	−
PARTY'S DRAWING No.	AS PER DRAWING	S6020	S6020
ALLOY & TEMPER	6063 T6	25381	25381
DESCRIPTION	MISC. SECTION