IAL-D-6515
25444

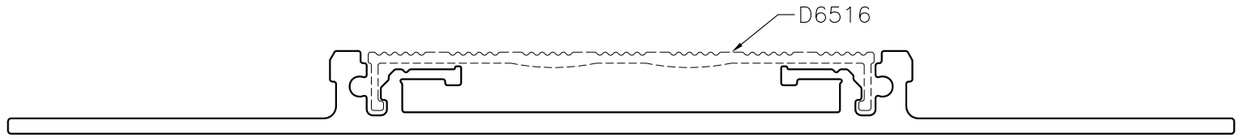

SCALE 1:1

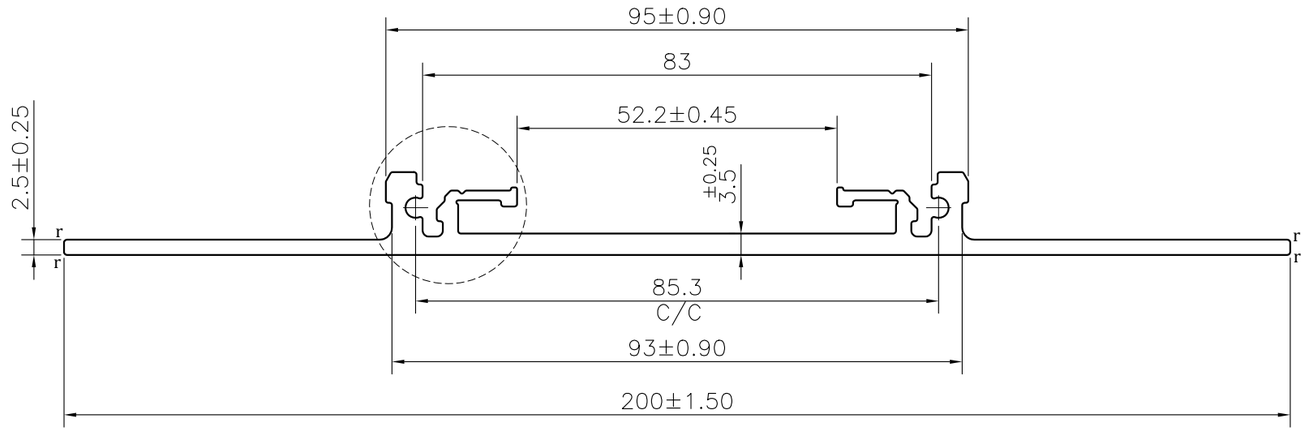

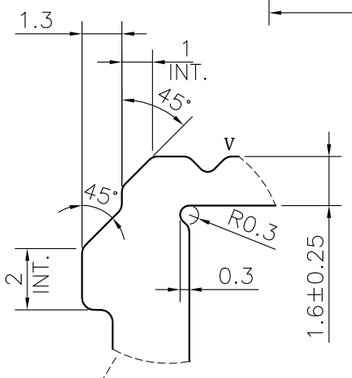

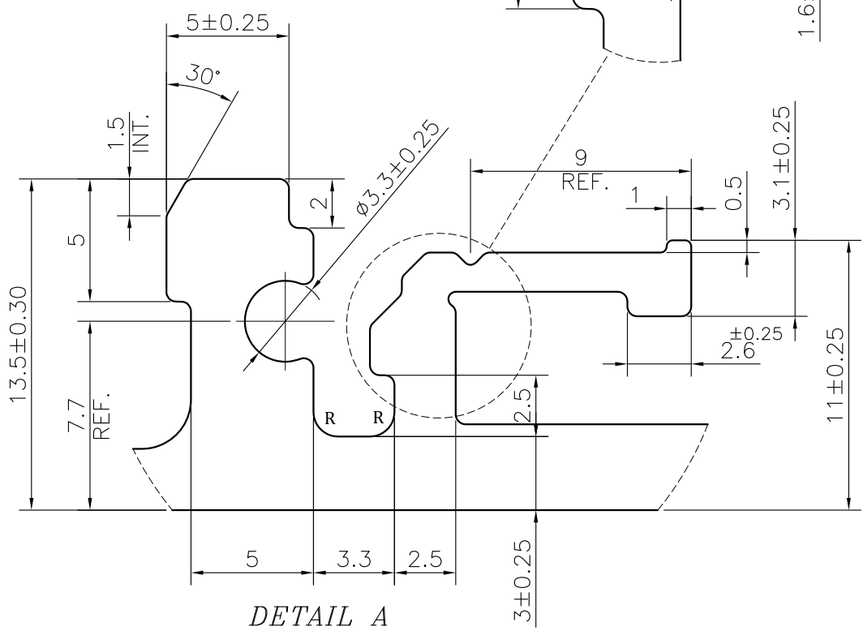

DETAIL A
SCALE 4:1

NOTE:-
r= 0.50 RADIUS (4 PLACES)
R= 1.0 RADIUS (4 PLACES)
V= 0.50x90° V-GROOVE (2 PLACES)

1. STRAIGHTNESS= 1.7mm/M
2. TWIST= 1.7mm/M
3. ANGULARITY= ±2°
4. FLATNESS= 0.007xWIDTH

JINDAL
SYMBOL OF QUALITY
AN ISO 9001 COMPANY

JINDAL ALUMINIUM LTD.
BHIWADI-301019 (INDIA)

	NAME	DATE
DRAWN	ASHUTOSH	31-08-2023
CHECKED		
APPROVED		

1. ALL DIMENSIONS ARE IN mm.
2. ROUND OFF ALL SHARP CORNERS WITH 0.40 mm.
3. TOLERANCES WILL BE AS PER BS:EN-755-9 , UNLESS OTHERWISE SPECIFIED

SCALE	1:1
AREA mm^2	754.5
PERIMETER mm.	526.06
WEIGHT kg/m	2.037

PARTY'S NAME	DHASHMESH ELECTRICAL
PARTY'S DRAWING No.	AS PER DRAWING
ALLOY & TEMPER	6063 T6 — PRODUCT CODE:-082 — HSN CODE:- 76042990
DESCRIPTION	AIR GRILL SECTION

DRAWING No.	SECTION No.
IAL-D-6515	-
25444	25444