P–7382–3
S2064
25779

DETAIL OF "A"
SCALE 4:1

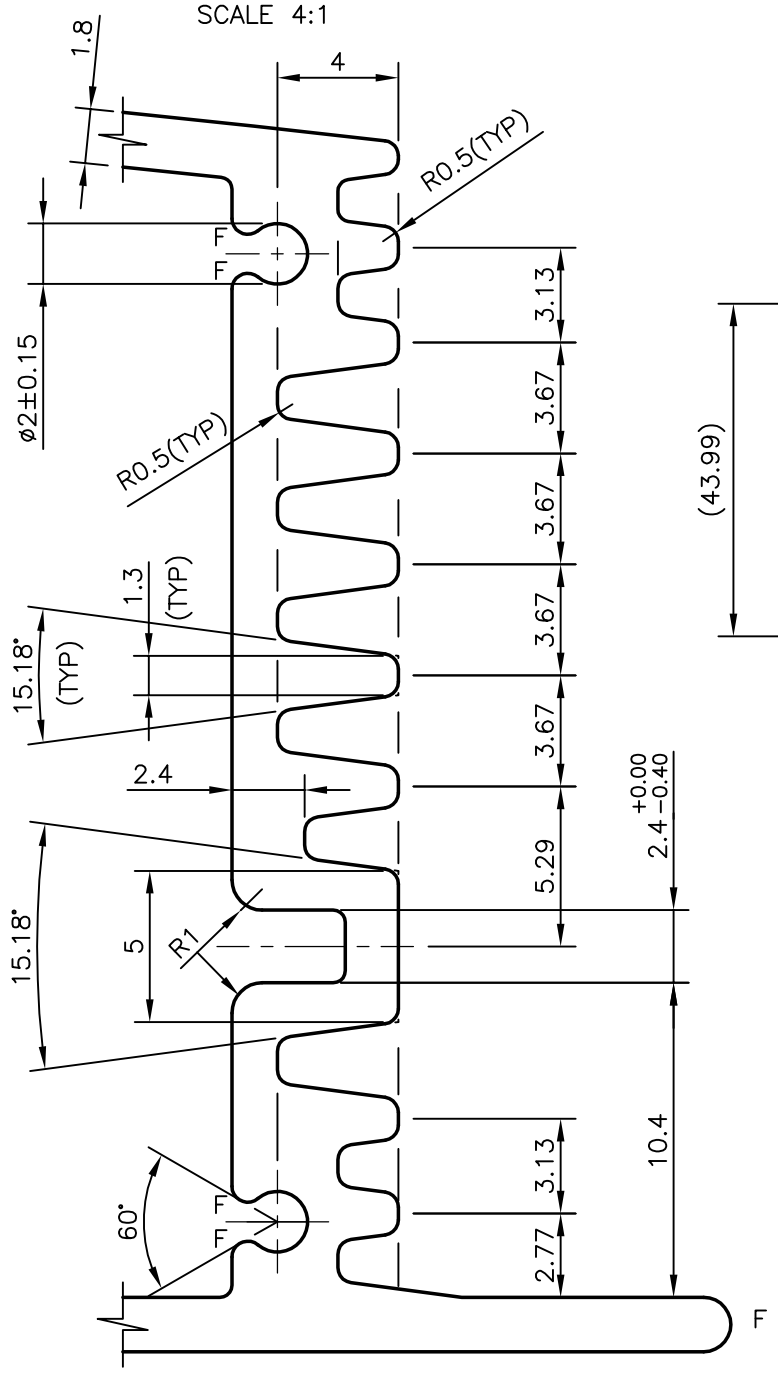

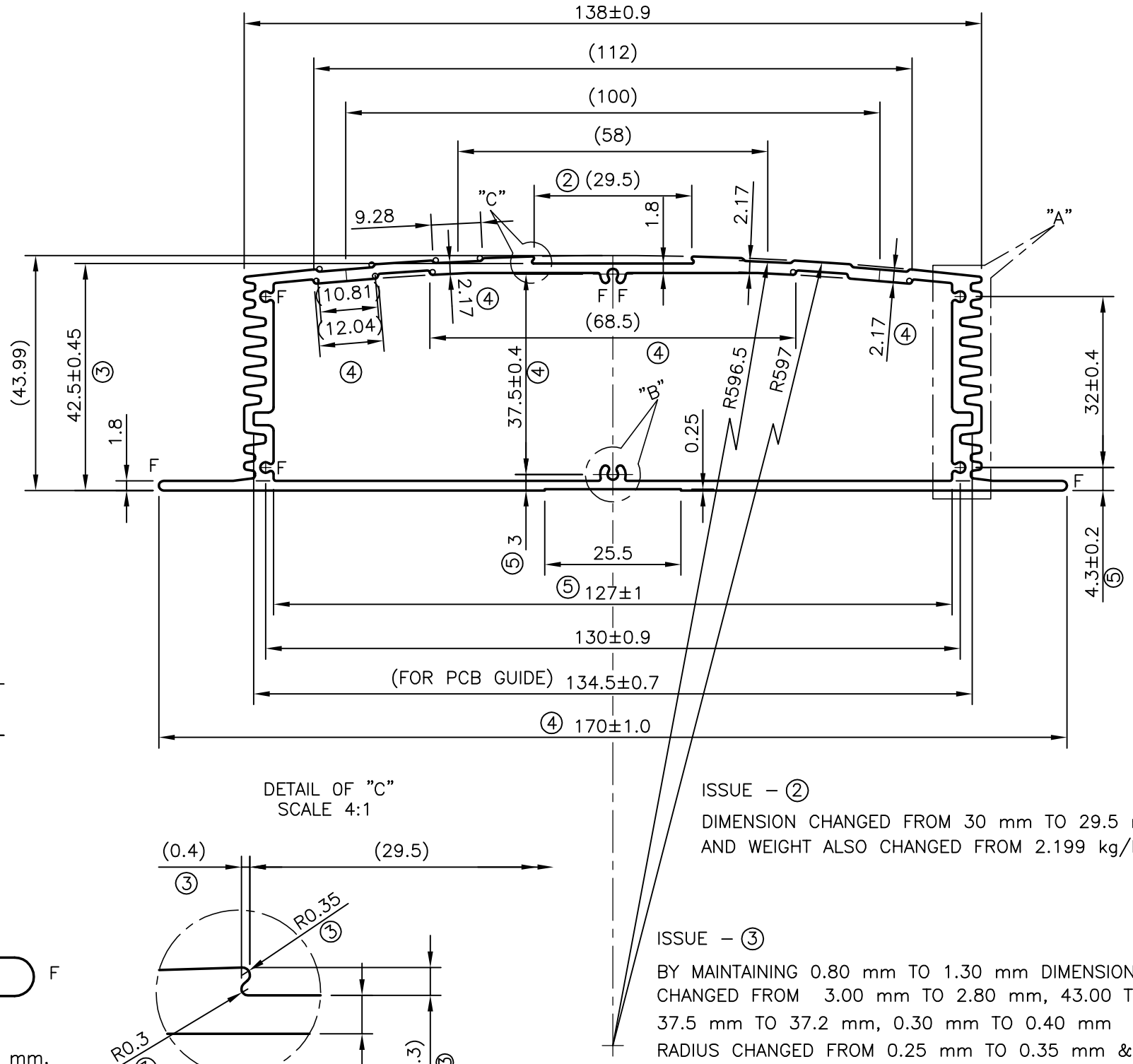

DETAIL OF "C"
SCALE 4:1

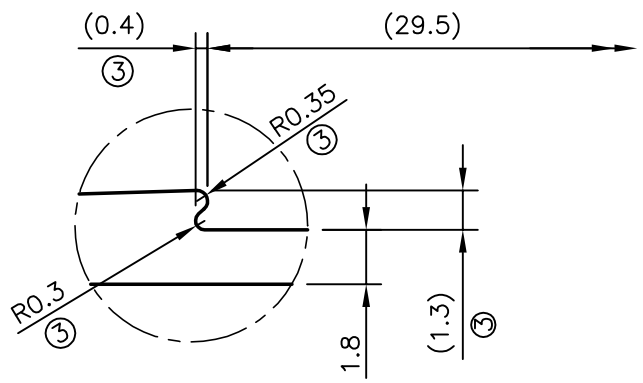

ISSUE – ②

DIMENSION CHANGED FROM 30 mm TO 29.5 mm
AND WEIGHT ALSO CHANGED FROM 2.199 kg/M TO 2.201 kg/m

ISSUE – ③

BY MAINTAINING 0.80 mm TO 1.30 mm DIMENSION, DIMENSIONS CHANGED FROM 3.00 mm TO 2.80 mm, 43.00 TO 42.5 mm, 37.5 mm TO 37.2 mm, 0.30 mm TO 0.40 mm
RADIUS CHANGED FROM 0.25 mm TO 0.35 mm & 0.15 mm TO 0.3 mm
WEIGHT ALSO CHANGED FROM 2.201 kg/m TO 2.200 kg/m

ISSUE – ④

DIMENSIONS CHANGED FROM 32.00 mm TO 68.5, 37.20 mm TO 37.50 mm, 1.80 mm TO 2.17 mm & 12.3 mm TO 12.04 mm, 160 mm TO 170 mm, DIMENSIONS ADDED 25.5 mm & 0.25 mm,
WEIGHT ALSO CHANGED FROM 2.200 kg/m TO 2.322 kg/m

ISSUE – ⑤

TOLERANCES ADDED FOR 127±1, ø4.8±0.2, 10.4±0.3

DETAIL OF "B"
SCALE 4:1

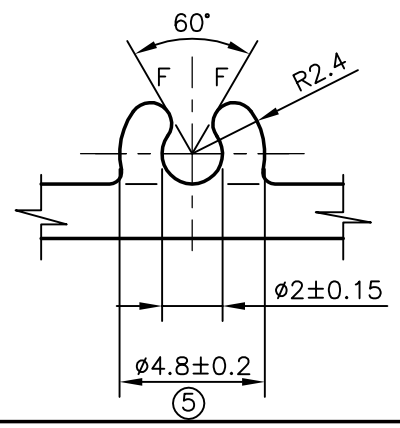

NOTE:–
1. F = FULL RADIUS (14 PLACES)
2. DIMENSION 134.5 mm (PCB GUIDE) AS BASIC DIMENSION
3. COMPONENT SHOULD BE FREE FROM BURRS, DUST AND SHARP CORNERS, DIE MARKS & OTHER EXTRUSION DEFFECTS

JINDAL SYMBOL OF QUALITY AN ISO 9001 COMPANY	*JINDAL ALUMINIUM LTD.* *BANGALORE–560073 (INDIA)*		NAME	DATE
		DRAWN	PRASANN. H	03–12–2007
		CHECKED		
		APPROVED		
1. ALL DIMENSIONS ARE IN mm. 2. ROUND OFF ALL SHARP CORNERS WITH 0.40 mm. 3. TOLERANCES WILL BE AS PERIS:6477–1983 UNLESS OTHERWISE SPECIFIED		SCALE		1:1
		AREA mm^2		859.732
		PERIMETER mm.		519.781
		WEIGHT kg/m		2.321
PARTY'S NAME	LINKWELL TELESYSTEMS PVT. LTD., HYDERABAD	DRAWING No.		SECTION No.
PARTY'S DRAWING No.	31261602–0021/REV–B	P–7382–3		–
ALLOY & TEMPER	6063 T6	S2064		S2064–ISSUE–5
DESCRIPTION	MISC. PROFILE	25779		25779