P–6277
26240

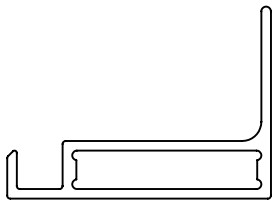

1:1

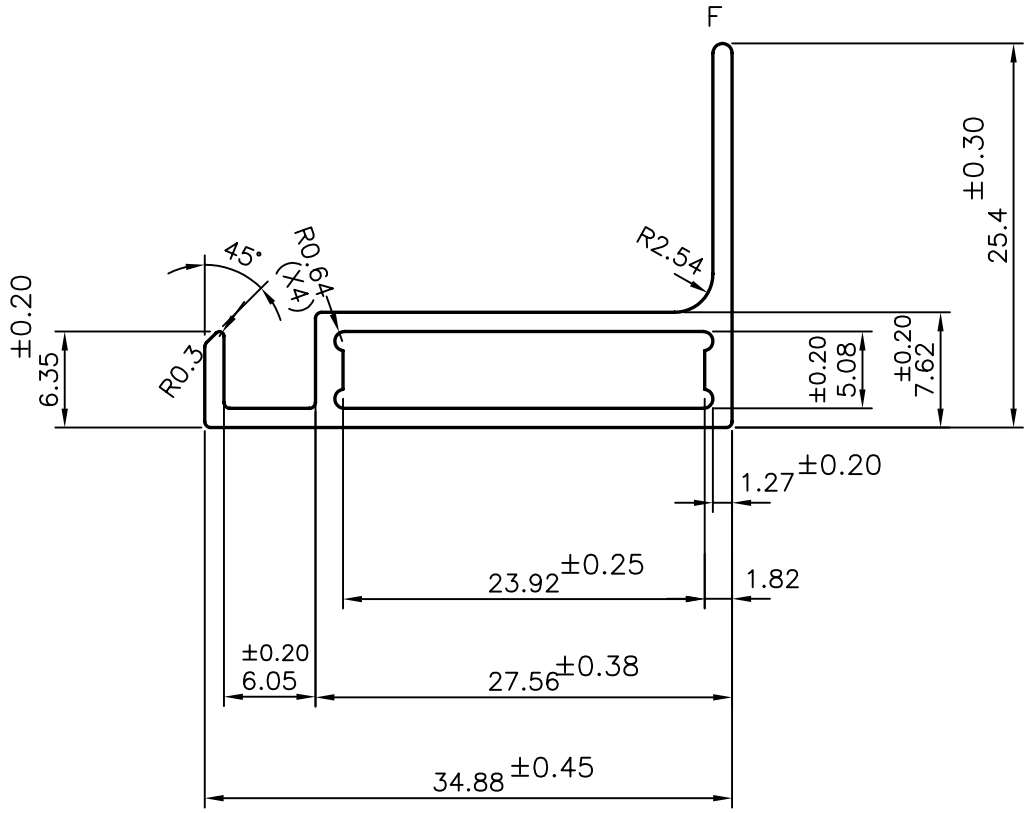

1 GENERAL WALL THICKNESS 1.27 (TYP)
2 F= FULL RADIUS (1)

JINDAL SYMBOL OF QUALITY AN ISO 9002 COMPANY	*JINDAL ALUMINIUM LTD.* *BANGALORE–560073 (INDIA)*		NAME	DATE
		DRAWN	J.P.KAUSHIK	20–03–2006
		CHECKED		
		APPROVED		
1. ALL DIMENSIONS ARE IN mm. 2. ROUND OFF ALL SHARP CORNERS WITH 0.40 mm. 3. TOLERANCES WILL BE AS PER IS:6477–1983 UNLESS OTHERWISE SPECIFIED		SCALE		2:1
		AREA mm^2		125.54
		PERIMETER mm.		127.572
PARTY'S NAME		WEIGHT kg/m		0.339
		DRAWING No.		SECTION No.
PARTY'S DRAWING No.	AS PER DRAWING	P–6277		–
ALLOY & TEMPER	6063 T5	26240		26240
DESCRIPTION	SOLAR SECTION			