P−6278
26241

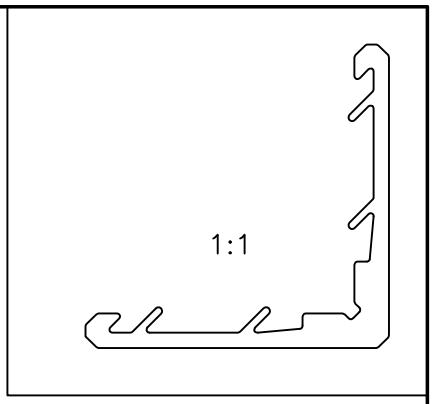

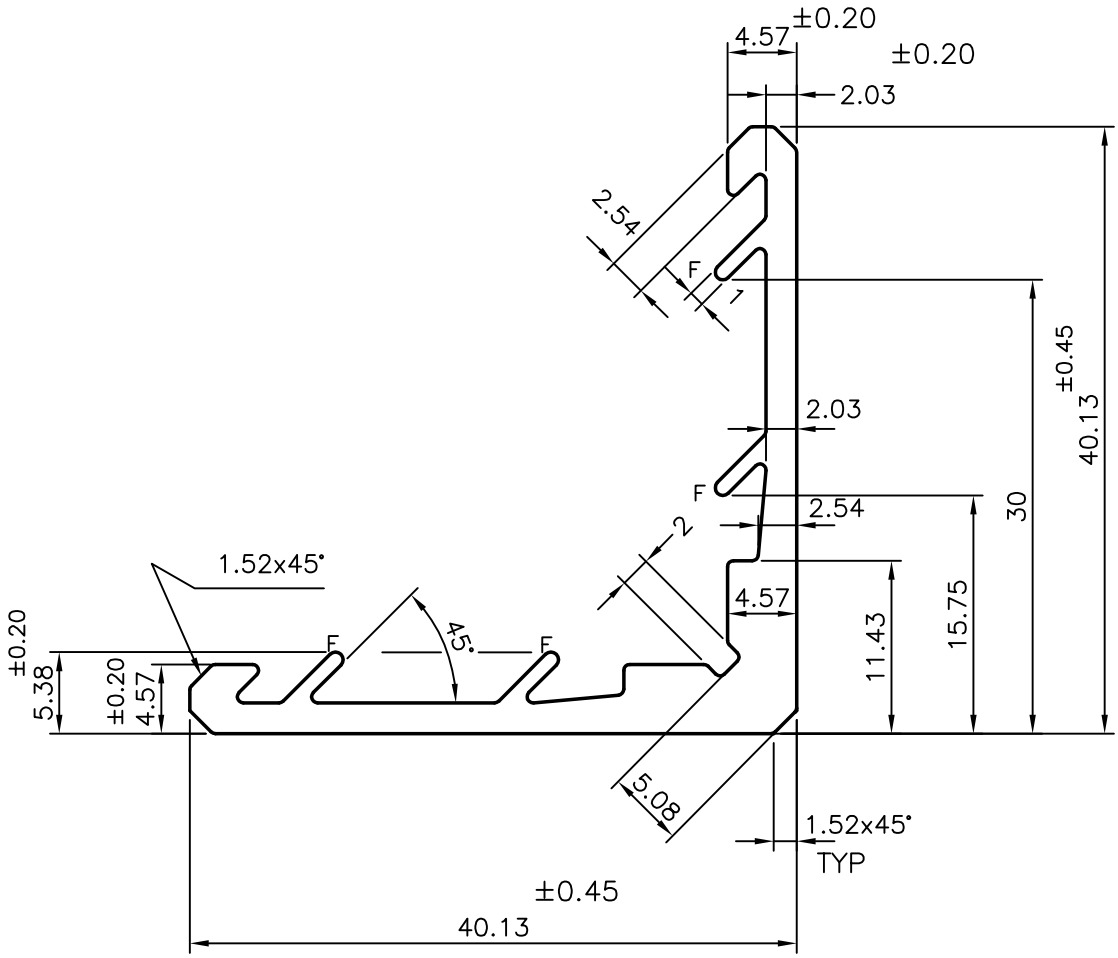

2 F= FULL RADIUS (4)

JINDAL SYMBOL OF QUALITY AN ISO 9002 COMPANY	*JINDAL ALUMINIUM LTD.* *BANGALORE−560073 (INDIA)*		NAME	DATE
		DRAWN	J.P.KAUSHIK	20−03−2006
		CHECKED		
		APPROVED		
1. ALL DIMENSIONS ARE IN mm. 2. ROUND OFF ALL SHARP CORNERS WITH 0.40 mm. 3. TOLERANCES WILL BE AS PER IS:3965−1981 UNLESS OTHERWISE SPECIFIED		SCALE		2:1
		AREA mm^2		234.508
		PERIMETER mm.		199.227
		WEIGHT kg/m		0.633
PARTY'S NAME	GENERAL CATEGORY .,BANGALORE MARKET	DRAWING No.		SECTION No.
PARTY'S DRAWING No.	AS PER DRAWING	P−6278		−
ALLOY & TEMPER	6063 T5	26241		26241
DESCRIPTION	SOLAR SECTION			