P−7800	
26249	

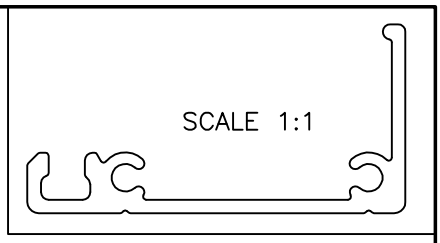

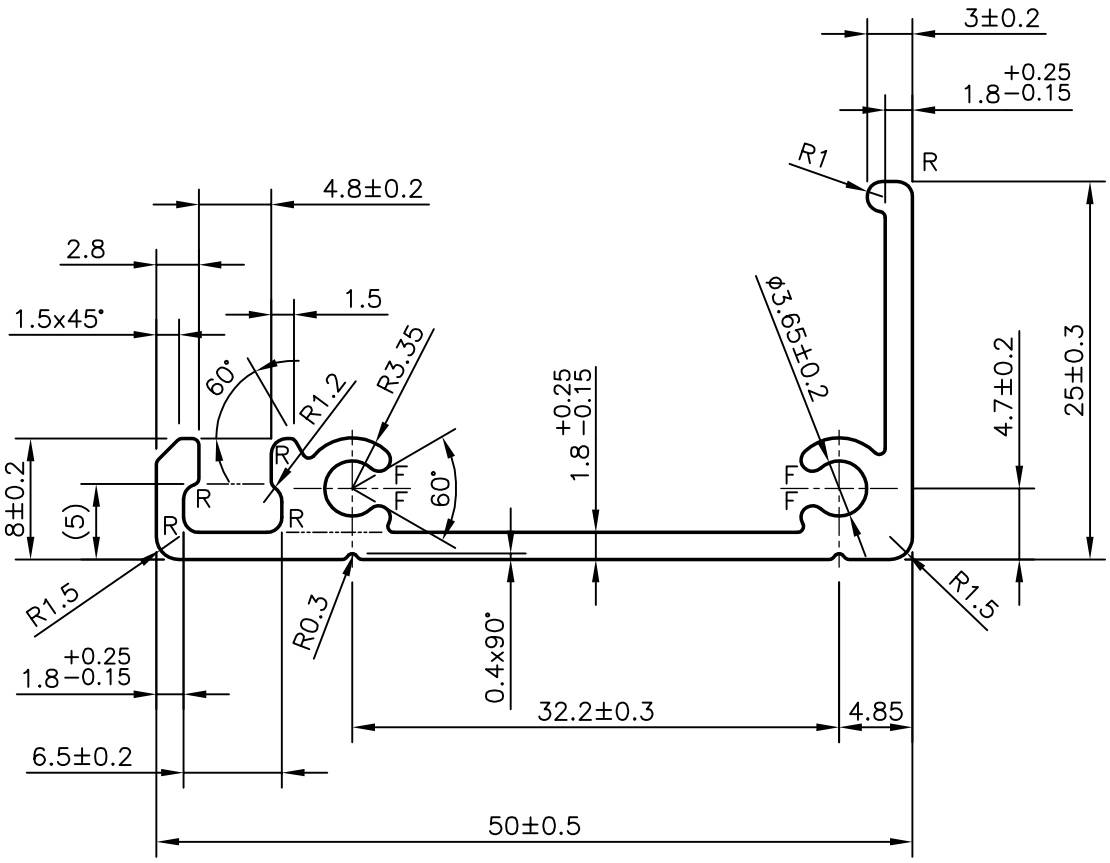

R = R1.0 mm (5 PLACES)

F = FULL RADIUS (4 PLACES)

			NAME	DATE
JINDAL SYMBOL OF QUALITY AN ISO 9001 COMPANY	*JINDAL ALUMINIUM LTD.* *BANGALORE−560073 (INDIA)*	DRAWN	PRASANNA. H	26−12−2007
		CHECKED		
		APPROVED		

1. ALL DIMENSIONS ARE IN mm.
2. ROUND OFF ALL SHARP CORNERS WITH 0.40 mm.
3. TOLERANCES WILL BE AS PER IS:3965−1981 UNLESS OTHERWISE SPECIFIED

SCALE	2:1
AREA mm^2	196.703
PERIMETER mm.	192.136
WEIGHT kg/m	0.531

PARTY'S NAME	ANOTECH ENGINEERS PVT. LTD., BANGALORE
PARTY'S DRAWING No.	4 679 02 00116
ALLOY & TEMPER	63400 WP
DESCRIPTION	SOLAR POWER SECTION

DRAWING No.	SECTION No.
P−7800	−
26249	26249