P-9210-1
S2141
26266

SCALE 1:1

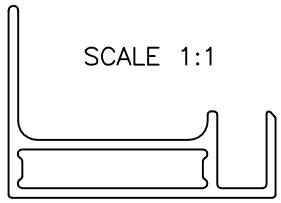

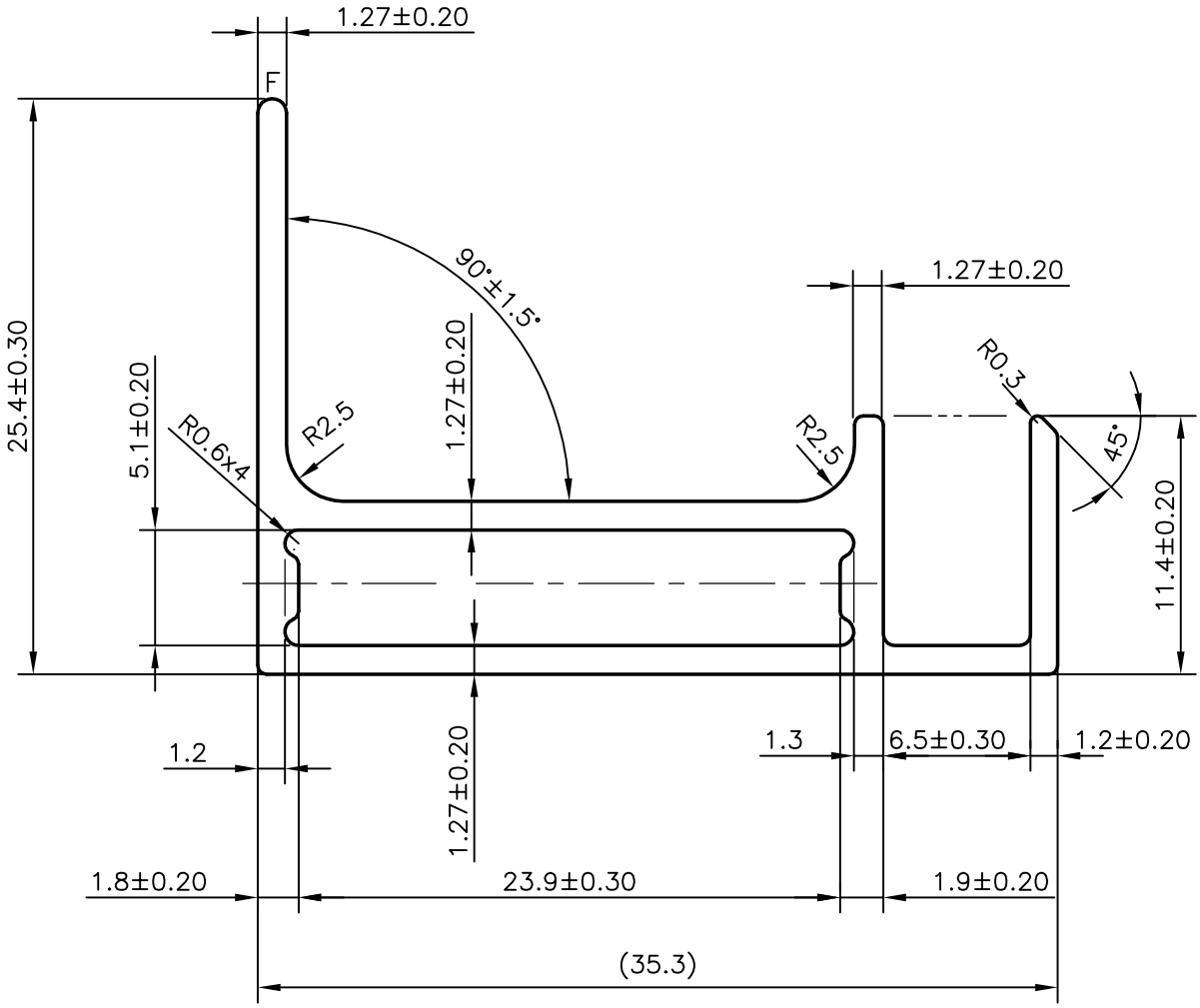

F= FULL RADIUS

			NAME	DATE
JINDAL SYMBOL OF QUALITY AN ISO 9001 COMPANY	*JINDAL ALUMINIUM LTD.* *BANGALORE-560073 (INDIA)*	DRAWN	J.P.KAUSHIK	22-05-2009
		CHECKED		
		APPROVED		

1. ALL DIMENSIONS ARE IN mm.
2. ROUND OFF ALL SHARP CORNERS WITH 0.4 mm.
3. TOLERANCES WILL BE AS PER IS:6477-1983 UNLESS OTHERWISE SPECIFIED

SCALE	3:1
AREA mm^2	137.859
PERIMETER mm.	144.416
WEIGHT kg/m	0.372

PARTY'S NAME	ALPEX EXPORT (P) LTD.,SOLAN (H.P.)
PARTY'S DRAWING No.	083-0123
ALLOY & TEMPER	HE9 WP
DESCRIPTION	SOLAR POWER SECTION

DRAWING No.	SECTION No.
P-9210-1	–
S2141	S2141
26266	26266