P–9401
S2194
26278

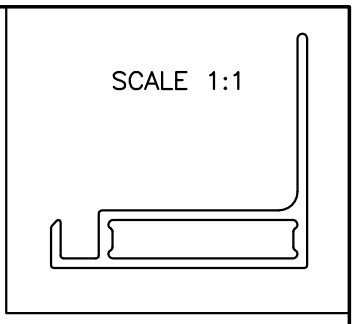

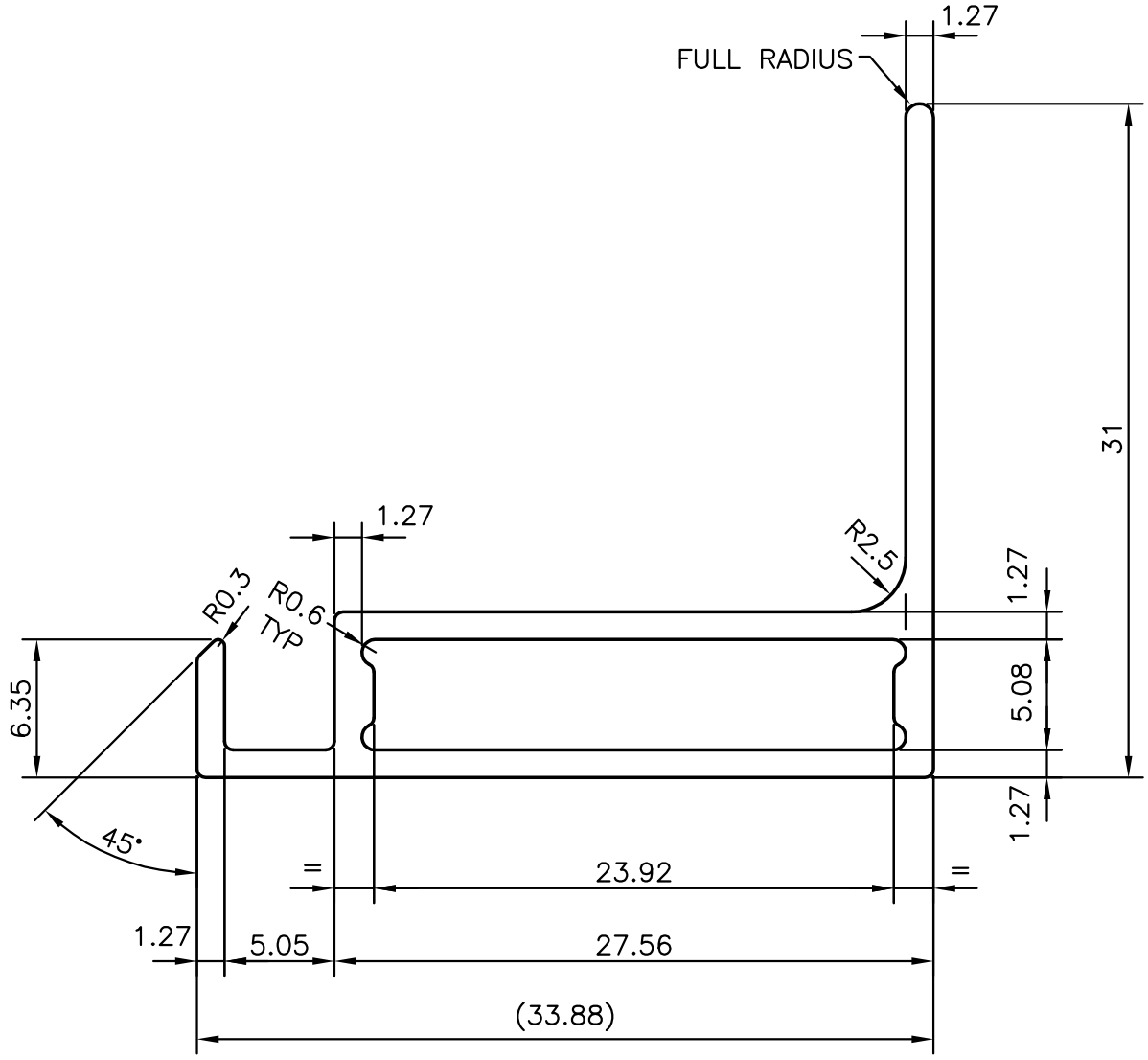

JINDAL SYMBOL OF QUALITY AN ISO 9001 COMPANY	*JINDAL ALUMINIUM LTD.* *BANGALORE–560073 (INDIA)*		NAME	DATE
		DRAWN	RAGHAVENDRA	15–07–2009
		CHECKED		
		APPROVED		
1. ALL DIMENSIONS ARE IN mm. 2. ROUND OFF ALL SHARP CORNERS WITH 0.40 mm. 3. TOLERANCES WILL BE AS PER IS:6477–1983 UNLESS OTHERWISE SPECIFIED		SCALE		3:1
		AREA mm^2		131.338
		PERIMETER mm.		136.789
PARTY'S NAME	MICROSUN SOLAR TECH PVT. LTD., BANGALORE	WEIGHT kg/m		0.355
		DRAWING No.		SECTION No.
PARTY'S DRAWING No.	AS PER DRAWING	P–9401		–
ALLOY & TEMPER	HE9 WP	S2194		S2194
		26278		26278
DESCRIPTION	SOLAR SECTION			