P–11262–1
S3070
26295

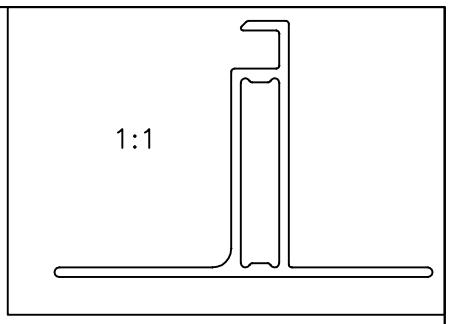

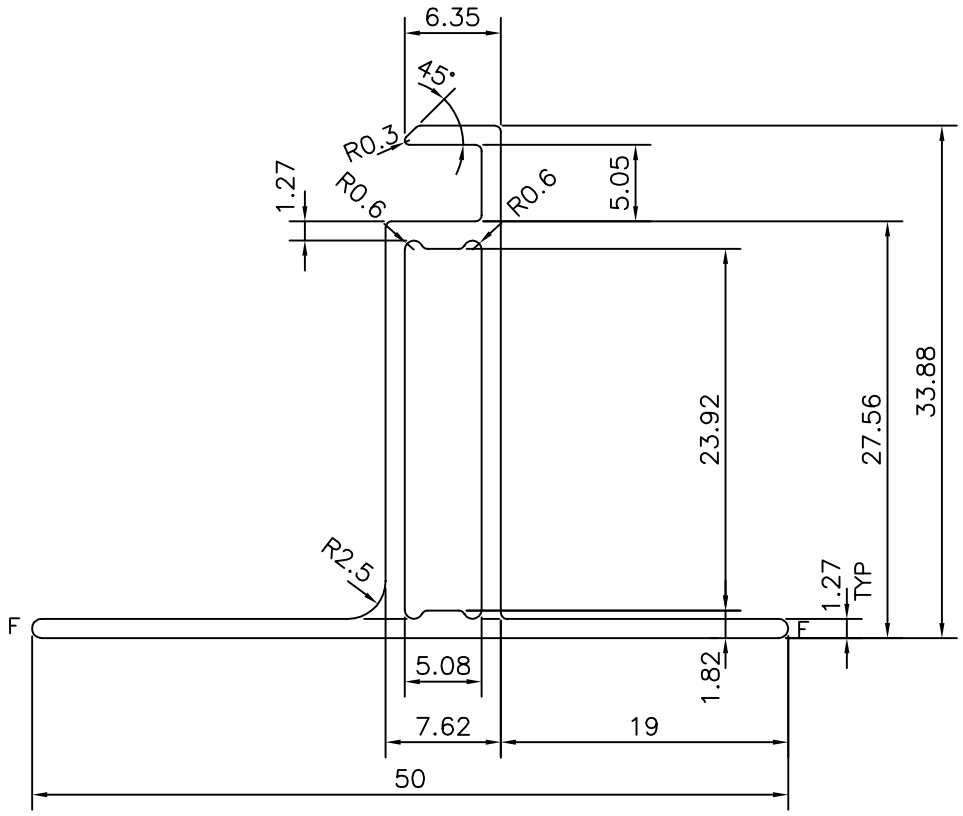

F = FULL RADIUS (2 PLACES)

JINDAL SYMBOL OF QUALITY AN ISO 9001 COMPANY	*JINDAL ALUMINIUM LTD.* *BANGALORE–560073 (INDIA)*		NAME	DATE
		DRAWN	J.P.KAUSHIK	14–10–2011
		CHECKED		
		APPROVED	S.S.GARG	20–10–2011
1. ALL DIMENSIONS ARE IN mm. 2. ROUND OFF ALL SHARP CORNERS WITH 0.40 mm. 3. TOLERANCES WILL BE AS PER, BS:EN–755–9 UNLESS OTHERWISE SPECIFIED		SCALE		2:1
		AREA mm^2		155.364
		PERIMETER mm.		174.244
PARTY'S NAME	UDHAYA ENERGY PHOTOVOLTAICS PVT.LTD., COIMBATORE	WEIGHT kg/m		0.419
		DRAWING No.		SECTION No.
PARTY'S DRAWING No.	AS PER DRAWING	P–11262–1		–
ALLOY & TEMPER	6063 T6	S3070		S3070
		26295		26295
DESCRIPTION	B TYPE FRAME SECTION SOLAR			