P-3434-1
S794
7662
26318

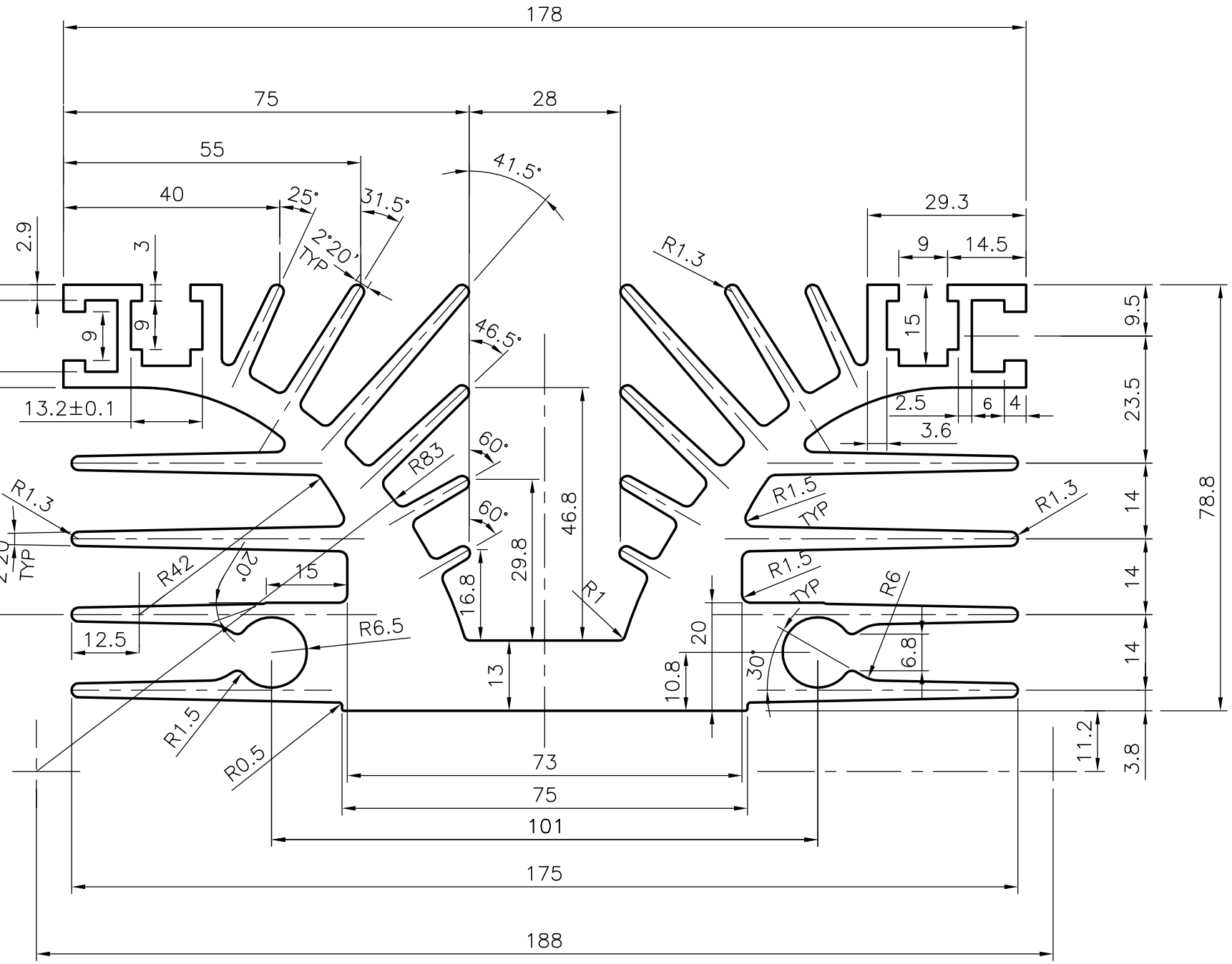

SYMBOL OF QUALITY AN ISO 9002 COMPANY	*JINDAL ALUMINIUM LTD.* *BANGALORE-560073 (INDIA)*		NAME	DATE
		DRAWN	RAGHAVENDRA	24-08-01
		CHECKED		
1. ALL DIMENSIONS ARE IN mm. 2. ROUND OFF ALL SHARP CORNERS WITH 0.40 mm. 3. TOLERANCES WILL BE AS PER IS: 3965-1981 UNLESS OTHERWISE SPECIFIED		APPROVED		
		SCALE	1:1	
PARTY'S NAME	HIND RECTIFIERS LTD BHANDUP ,. MUMBAI	WEIGHT kg/m	13.933	
PARTY'S DRAWING No.	AS PER DRAWING (7525)	PERIMETER	1870.83mm	
ALLOY & TEMPER	HE9 WP	SECTION No.	*26318*	
DESCRIPTION	HEAT SINK	DRAWING No.	*26318*	