P-2156-2
S337
7627
26341

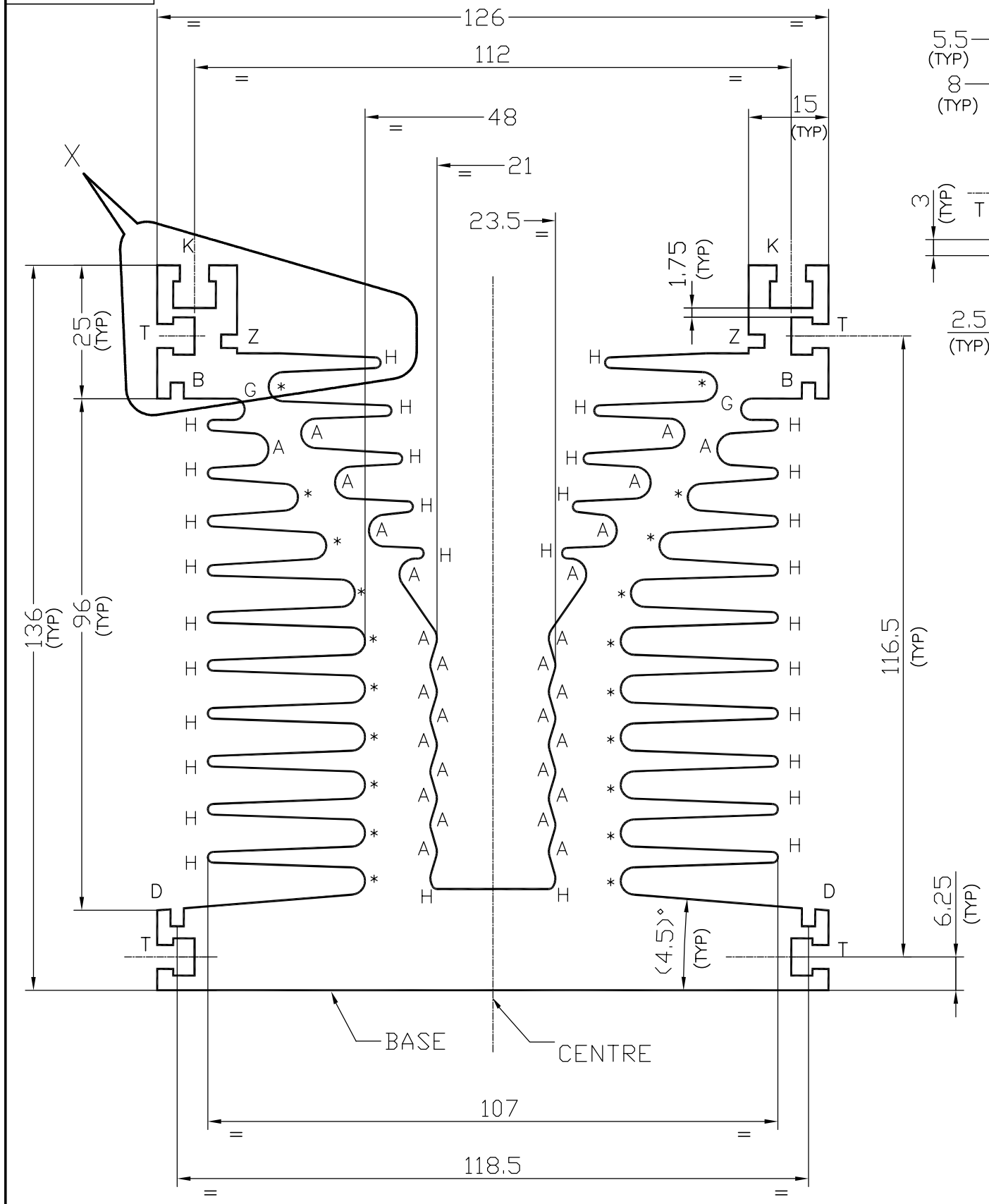

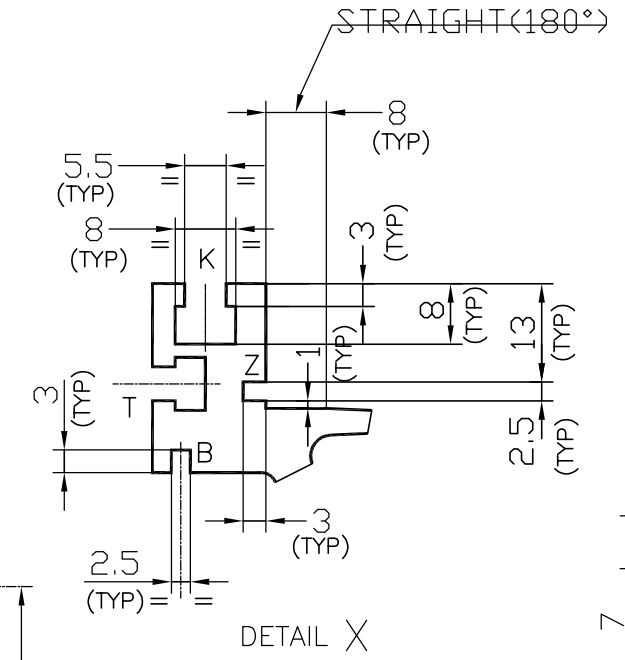

H = RAD 1 (32 Nos)
* = RAD 2.5 (20 Nos)
A = RAD 3 (28 Nos)
G = RAD 2.0 (02 Nos)
K = T SLOT (02 Nos)
T = T SLOT (04 Nos)
B = GROOVE (02 Nos)
D = GROOVE (02 Nos)
Z = GROOVE (02 Nos)

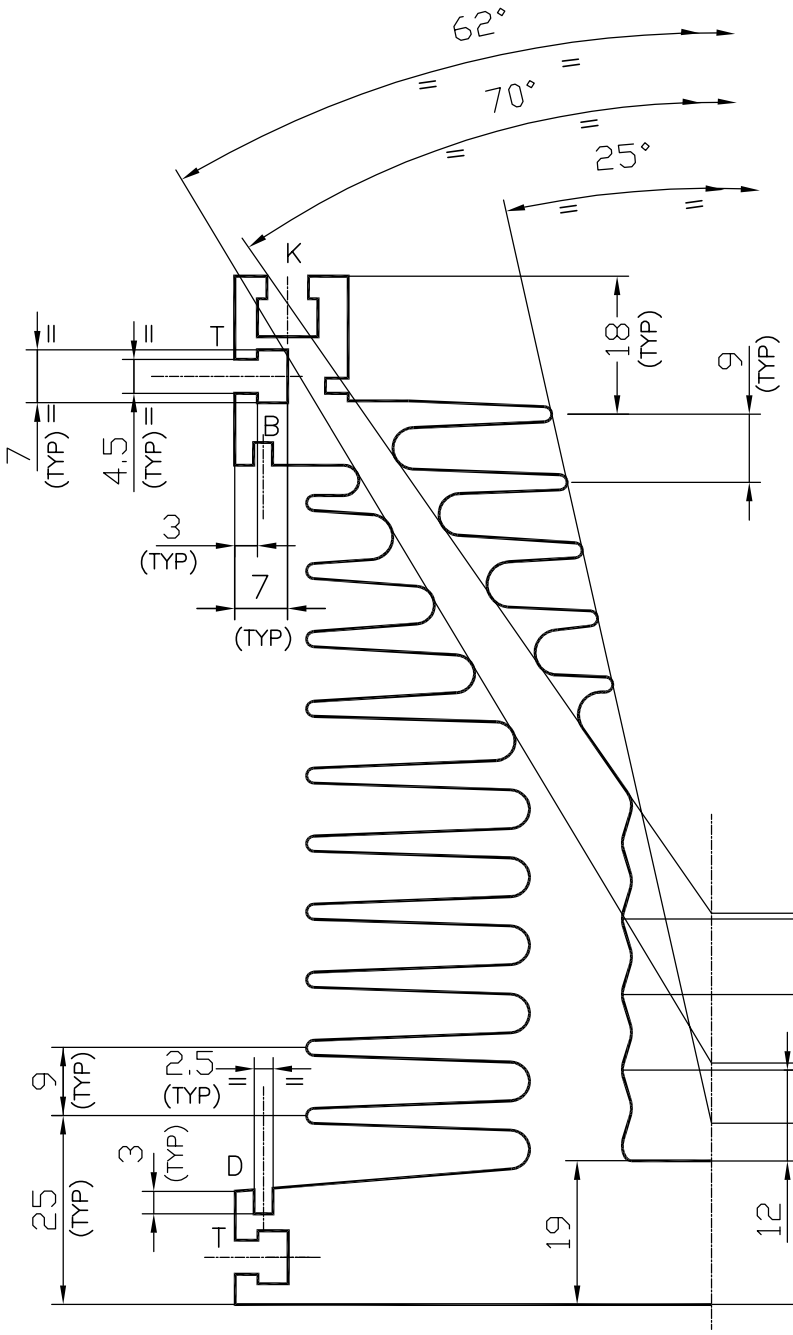

JINDAL ALUMINIUM LTD.

BANGALORE-560073

1. ALL DIMENSIONS ARE IN mm.
2. ROUND OFF ALL SHARP CORNERS WITH 0.4 mm.
3. TOLERANCES WILL BE AS PER IS: 3965-1981 ,UNLESS OTHERWISE SPECIFIED

			NAME	DATE
		DRAWN	P,KULKARNI	8-1-99
		CHECKED		
		APPROVED		
PARTY'S NAME	ELECTRONICS & CONTROLS POWER SYSTEMS (P) LTD. BANGALORE	SCALE	1:1	
PARTY'S DRAWING No.	AS PER SAMPLE	WEIGHT kg/m	18.157	
ALLOY & TEMPER	HE9 WP	SECTION No.	26341	
LENGTH	RANDOM LENGTH 500 mm	DRAWING No.	26341	
DESCRIPTION	HEAT SINK			