P-3162-1
S660
7648
26358

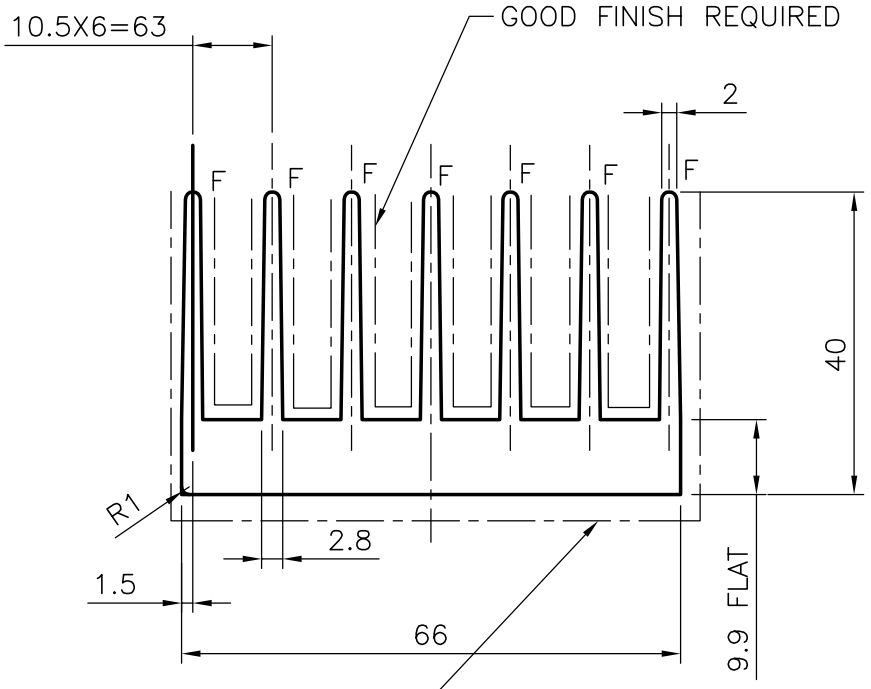

SURFACE SHOULD BE SMOOTH AND SHOULD BE FREE FROM SCRATCH AND DENT

NOTE:-

1.F=FULL RADII (7-PLCS)

JINDAL SYMBOL OF QUALITY AN ISO 9002 COMPANY	*JINDAL ALUMINIUM LTD.* *BANGALORE-560073 (INDIA)*		NAME	DATE
		DRAWN	RANGASWAMY	05-04-01
		CHECKED		
1. ALL DIMENSIONS ARE IN mm. 2. ROUND OFF ALL SHARP CORNERS WITH 0.40 mm. 3. TOLERANCES WILL BE AS PER IS 3965-1981 UNLESS OTHERWISE SPECIFIED		APPROVED		
		SCALE	1:1	
PARTY'S NAME	TUMKUR PRECISION PRESSING ., TUMKUR	WEIGHT kg/m	3.113	
PARTY'S DRAWING No.	AS PER SAMPLE	SECTION No.	26358	
ALLOY & TEMPER	HE9 WP	DRAWING No.		
DESCRIPTION	HEAT SINK	26358		