| P-6281 |
|---|
| S1729 |
| 26380 |

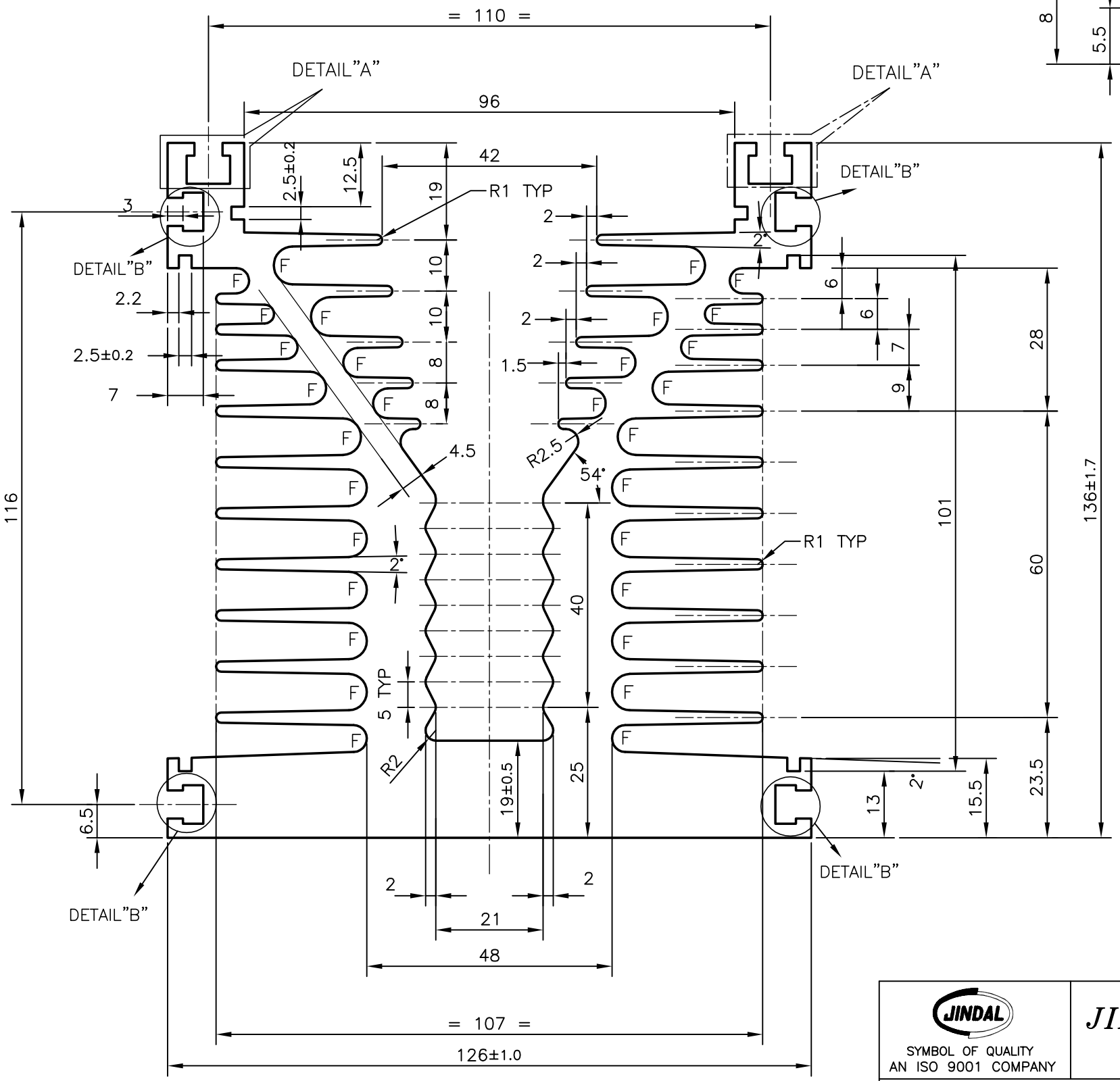


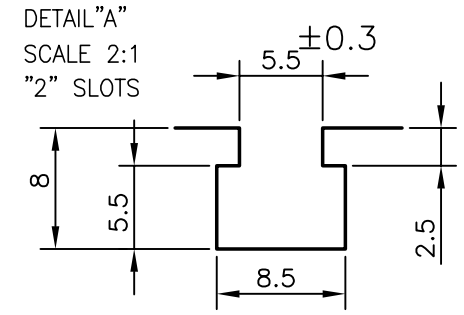


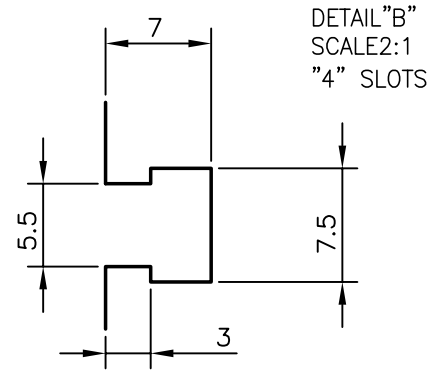


1. F = FULL RADII (30-PLCS)

SYMBOL OF QUALITY
AN ISO 9001 COMPANY

**JINDAL ALUMINIUM LTD.**
*BANGALORE-560073 (INDIA)*

1. ALL DIMENSIONS ARE IN mm.
2. ROUND OFF ALL SHARP CORNERS WITH 0.40 mm.
3. TOLERANCES WILL BE AS PER IS:3965-1981 UNLESS OTHERWISE SPECIFIED

| | | NAME | DATE |
|---|---|---|---|
| DRAWN | | J.P.KAUSHIK | 20-03-2006 |
| CHECKED | | | |
| APPROVED | | | |
| SCALE | | | 1:1 |
| AREA $mm^2$ | | | 6136.315 |
| PERIMETER mm. | | | 2098.311 |
| WEIGHT kg/m | | | 16.568 |

| | | DRAWING No. | SECTION No. |
|---|---|---|---|
| PARTY'S NAME | AKASH ENTERPRISES.,PUNE | P-6281 | - |
| PARTY'S DRAWING No. | AS PER SPECIFICATION | S1729 | S1729 |
| ALLOY & TEMPER | HE9 WP | 26380 | 26380 |
| DESCRIPTION | HEAT SINK SECTION | | |