7889	
26567	

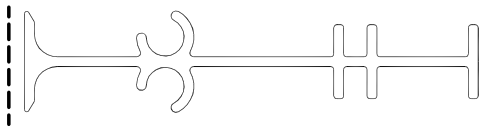

1:1

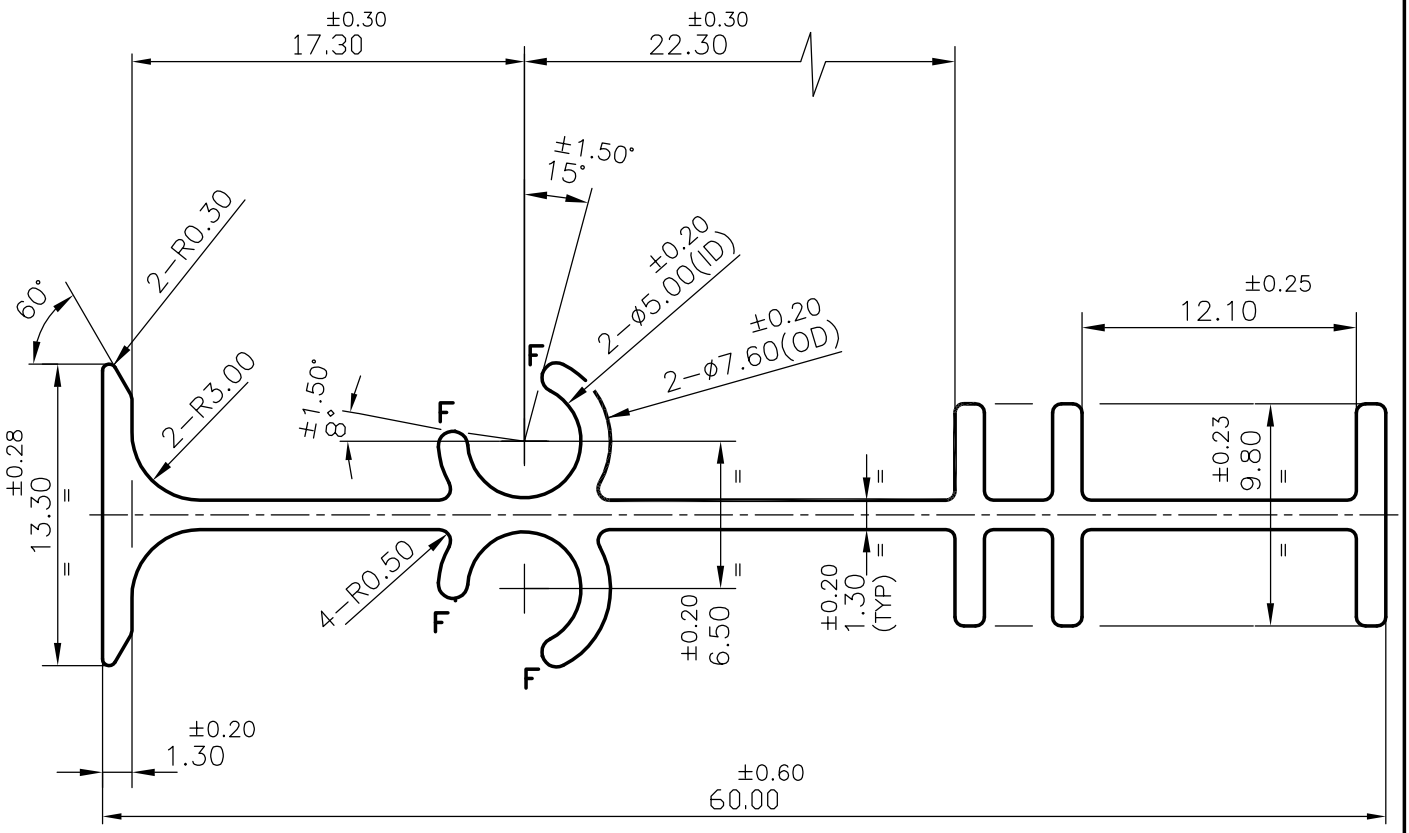

GENERAL WALL THICKNESS 1.30 ±0.20 mm
F = RADII FULL (4)
------- EXPOSED SURFACE

JINDAL SYMBOL OF QUALITY AN ISO 9002 COMPANY	*JINDAL ALUMINIUM LTD.* *BANGALORE-560073 (INDIA)*		NAME	DATE
		DRAWN	P,KULKARNI	28-12-99
		CHECKED		
		APPROVED		
1. ALL DIMENSIONS ARE IN mm. 2. ROUND OFF ALL SHARP CORNERS WITH 0.40 mm. 3. TOLERANCES WILL BE AS PER BS:1467-1987 UNLESS OTHERWISE SPECIFIED		SCALE	3:1	
PARTY'S NAME	AIR MASTER EQUIPMENTS EMIRATES LLC.	WEIGHT kg/m	0.427	
PARTY'S DRAWING No.	AS PER SKETCH (NEAREST OUR SEC No S428)	SECTION No.	26567	
ALLOY & TEMPER	6063 T6 LENGTH: 5850 mm	DRAWING No.		
DESCRIPTION	SLOT "T"	26567		