P-3784
S872
9219
26653

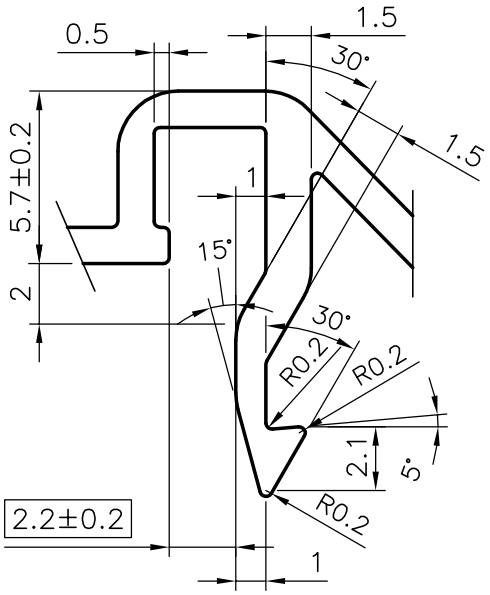

DETAIL"A"
SCALE 4:1

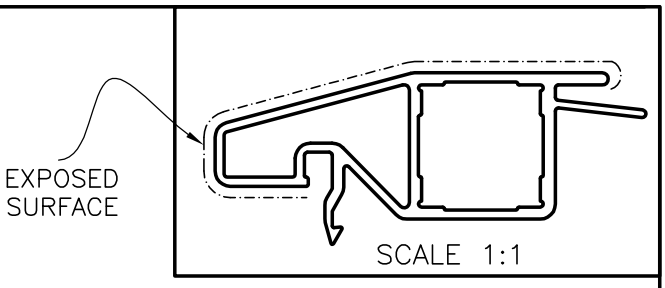

1. STRAIGHTNESS = 1.7mm/M
2. F = FULL RADII (6 PLACES)
3. R = R2 (9 PLACES)
4. UNSPECIFIED RADIOS = 0.40R
5. WALL THICKNESS = 1.2±0.15
6. BRINELL HARDNESS = 70–75
7 ▭ DIMENSIONS ARE IMPORTANT

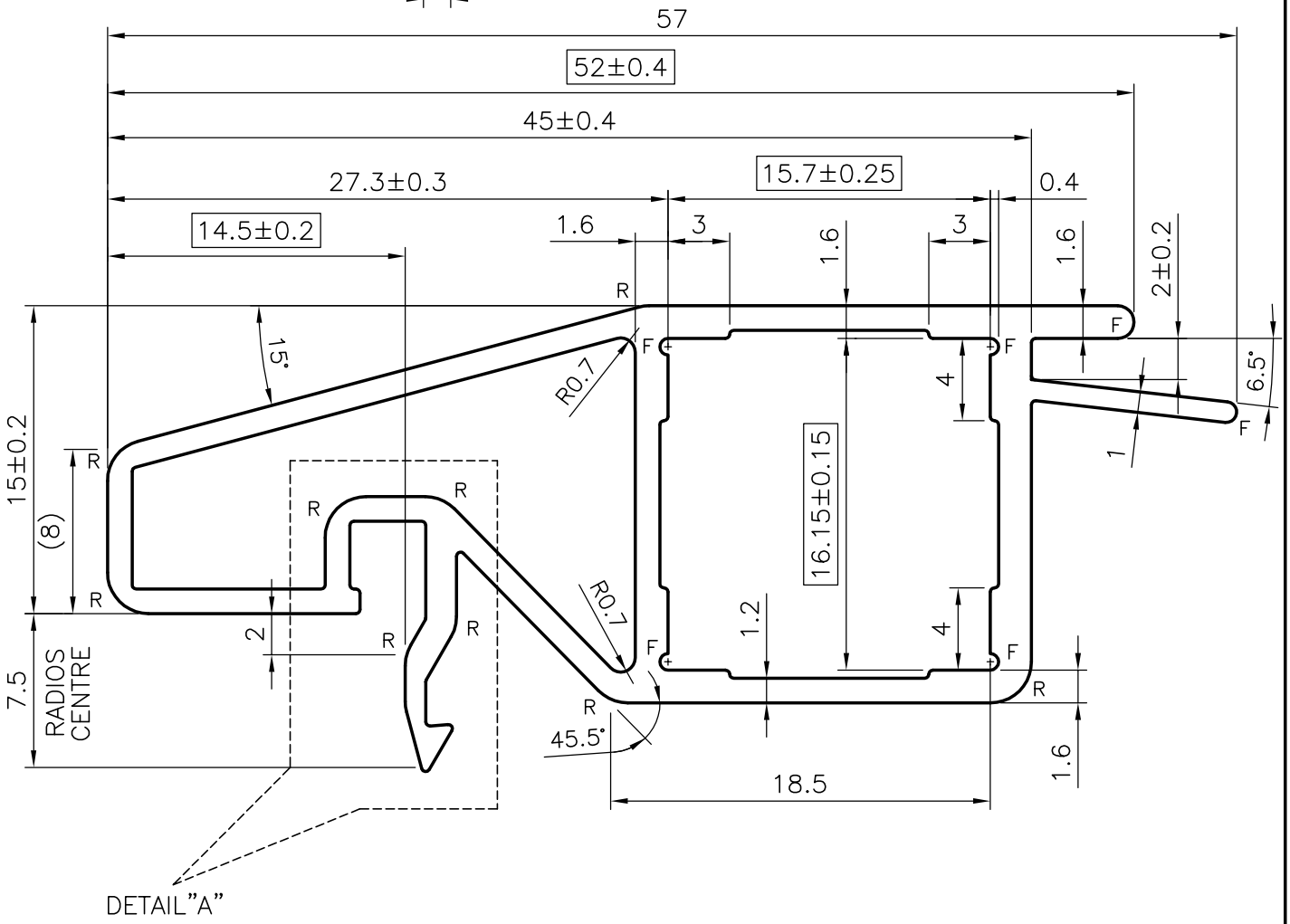

			NAME	DATE
JINDAL SYMBOL OF QUALITY AN ISO 9002 COMPANY	JINDAL ALUMINIUM LTD. BANGALORE–560073 (INDIA)	DRAWN	RAGHAVENDRA	28–02–02
		CHECKED		
		APPROVED		

1. ALL DIMENSIONS ARE IN mm.
2. ROUND OFF ALL SHARP CORNERS WITH 0.40 mm.
3. TOLERANCES WILL BE AS PER IS 6477–1983 UNLESS OTHERWISE SPECIFIED

		SCALE	3:1 & 1:1
		AREA mm²	221.23
PARTY'S NAME	CARRIER REFRIGERATION PVT LTD ,. BANGALORE	PERIMETER	183.70mm
PARTY'S DRAWING No.	EK0907001	WEIGHT kg/m	0.597
ALLOY & TEMPER	HE9 WP	SECTION No.	26653
DESCRIPTION	MISC HOLLOW	DRAWING No.	26653