P–5711
26706

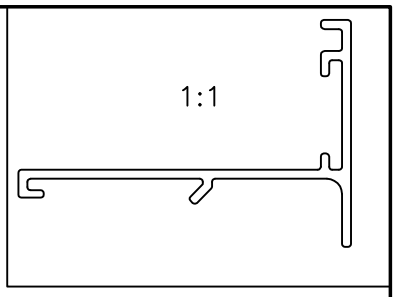

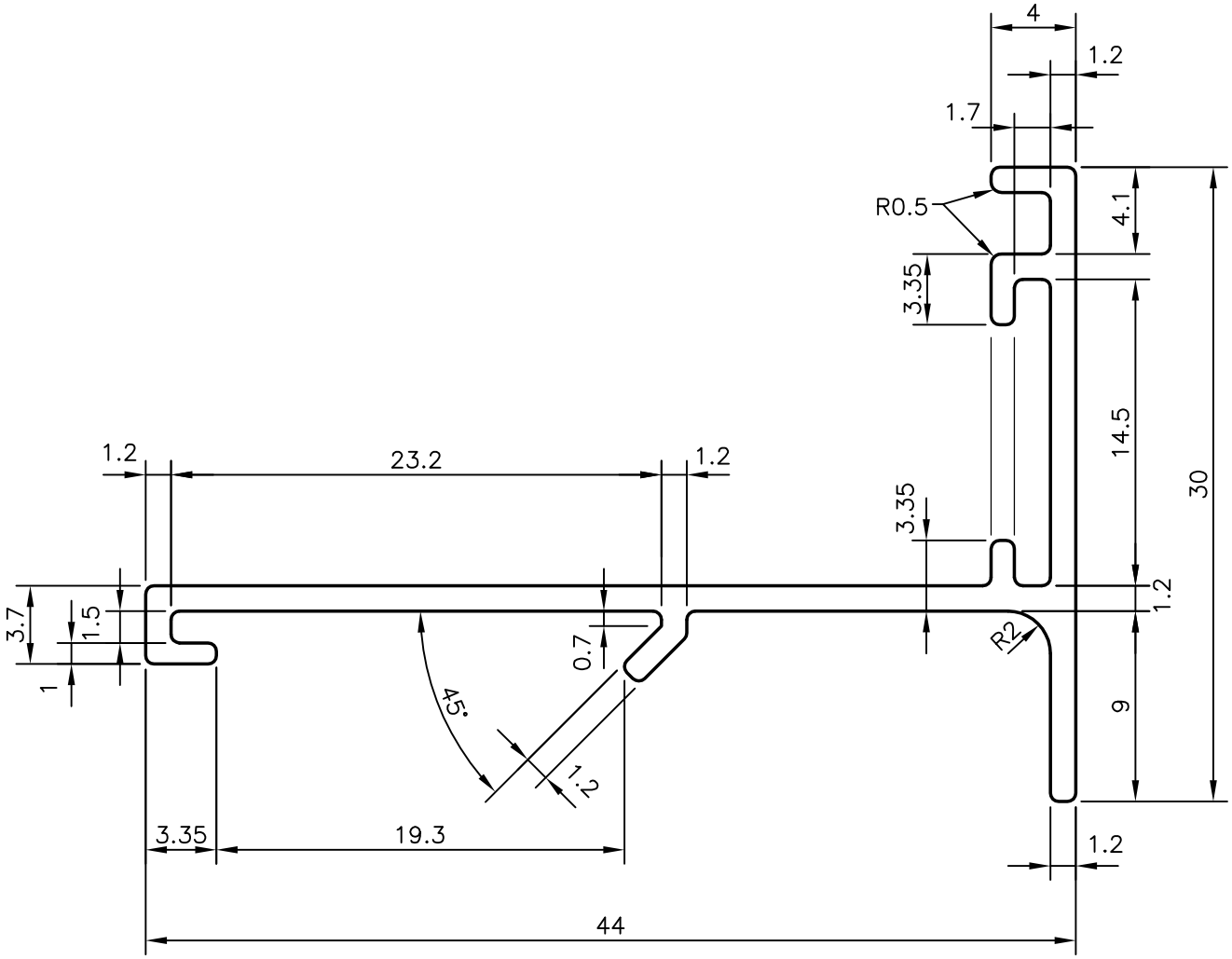

JINDAL SYMBOL OF QUALITY AN ISO 9001 COMPANY	*JINDAL ALUMINIUM LTD.* *BANGALORE–560073 (INDIA)*		NAME	DATE
		DRAWN	RAGHAVENDRA	23–07–2005
		CHECKED		
		APPROVED		
1. ALL DIMENSIONS ARE IN mm. 2. ROUND OFF ALL SHARP CORNERS WITH 0.40 mm. 3. TOLERANCES WILL BE AS PER BS:1474–1987 UNLESS OTHERWISE SPECIFIED		SCALE		3:1
		AREA mm^2		109.292
		PERIMETER mm.		179.316
PARTY'S NAME	AIR MASTER EQUIPMENTS EMIRATES LLC	WEIGHT kg/m		0.295
		DRAWING No.		SECTION No.
PARTY'S DRAWING No.	AS PER DRAWING	P–5711		–
		26706		26706
ALLOY & TEMPER	6063 T6			
DESCRIPTION	AIR GRILL SECTION			