P−6799
26744

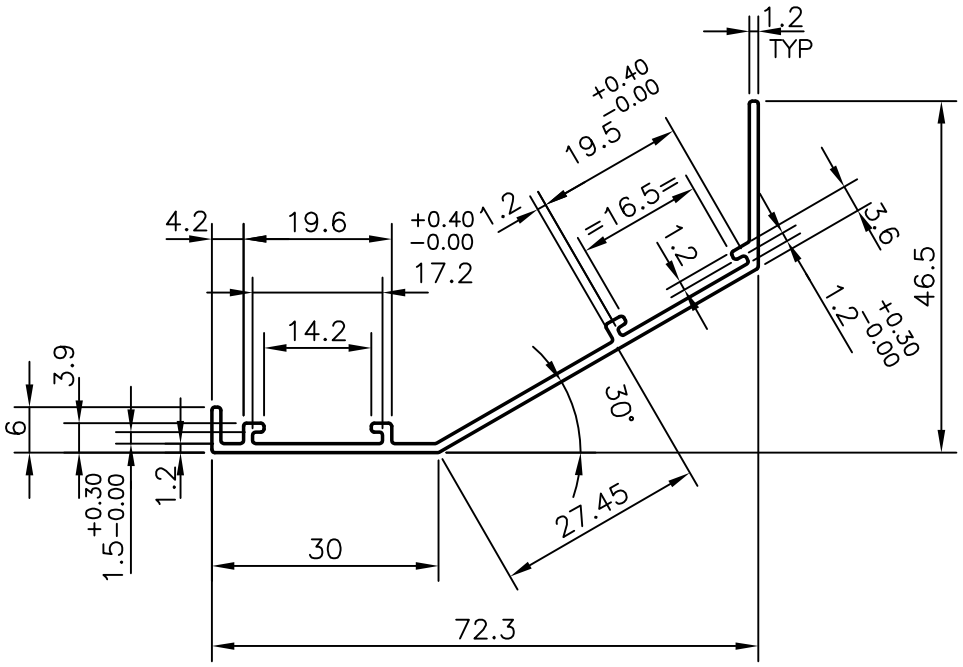

			NAME	DATE
JINDAL SYMBOL OF QUALITY AN ISO 9001 COMPANY	*JINDAL ALUMINIUM LTD.* *BANGALORE−560073 (INDIA)*	DRAWN	*J.P.KAUSHIK*	02−11−2006
		CHECKED		
		APPROVED		

1. ALL DIMENSIONS ARE IN mm.
2. ROUND OFF ALL SHARP CORNERS WITH 0.40 mm.
3. TOLERANCES WILL BE AS PER EN12020−2:2001 UNLESS OTHERWISE SPECIFIED

SCALE	1:1
AREA mm^2	143.803
PERIMETER mm.	235.87
WEIGHT kg/m	0.388

PARTY'S NAME	K.B.E INTERNATIONAL S.A.L., LEBANON
PARTY'S DRAWING No.	11594
ALLOY & TEMPER	6063 T6
DESCRIPTION	AIR GRILL SECTION

DRAWING No.	SECTION No.
P−6799	−
26744	26744