P–6696
26747

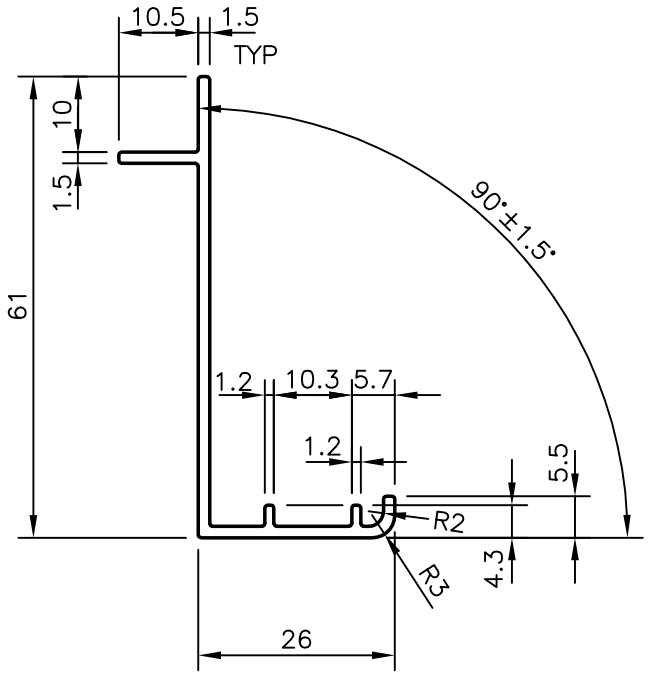

JINDAL SYMBOL OF QUALITY AN ISO 9002 COMPANY	*JINDAL ALUMINIUM LTD.* *BANGALORE–560073 (INDIA)*		NAME	DATE
		DRAWN	*J.P.KAUSHIK*	26–09–2006
		CHECKED		
		APPROVED		
1. ALL DIMENSIONS ARE IN mm. 2. ROUND OFF ALL SHARP CORNERS WITH 0.40 mm. 3. TOLERANCES WILL BE AS PER BS:1474–1987 UNLESS OTHERWISE SPECIFIED		SCALE		1:1
		AREA mm^2		155.51
		PERIMETER mm.		208.964
		WEIGHT kg/m		0.420
PARTY'S NAME	BETA INDUSTRIAL L.L.C.	DRAWING No.		SECTION No.
PARTY'S DRAWING No.	AS PER DRAWING	P–6696		–
ALLOY & TEMPER	6063 T6	26747		26747
DESCRIPTION	AIR GRILL SECTION			