P–9178
S2124
26841

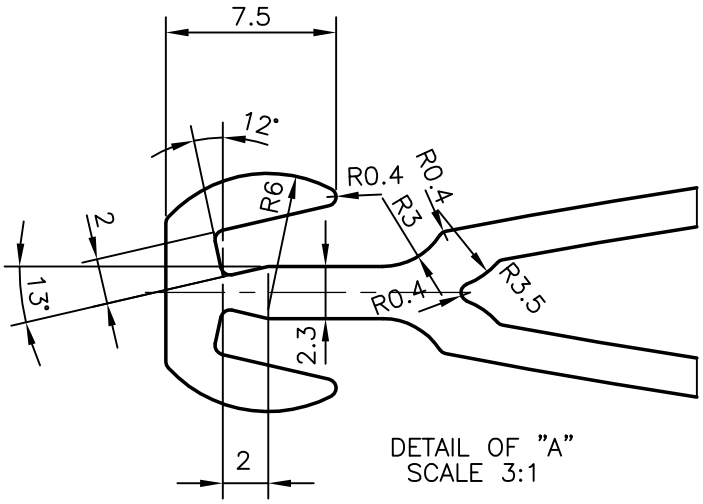

DETAIL OF "A"
SCALE 3:1

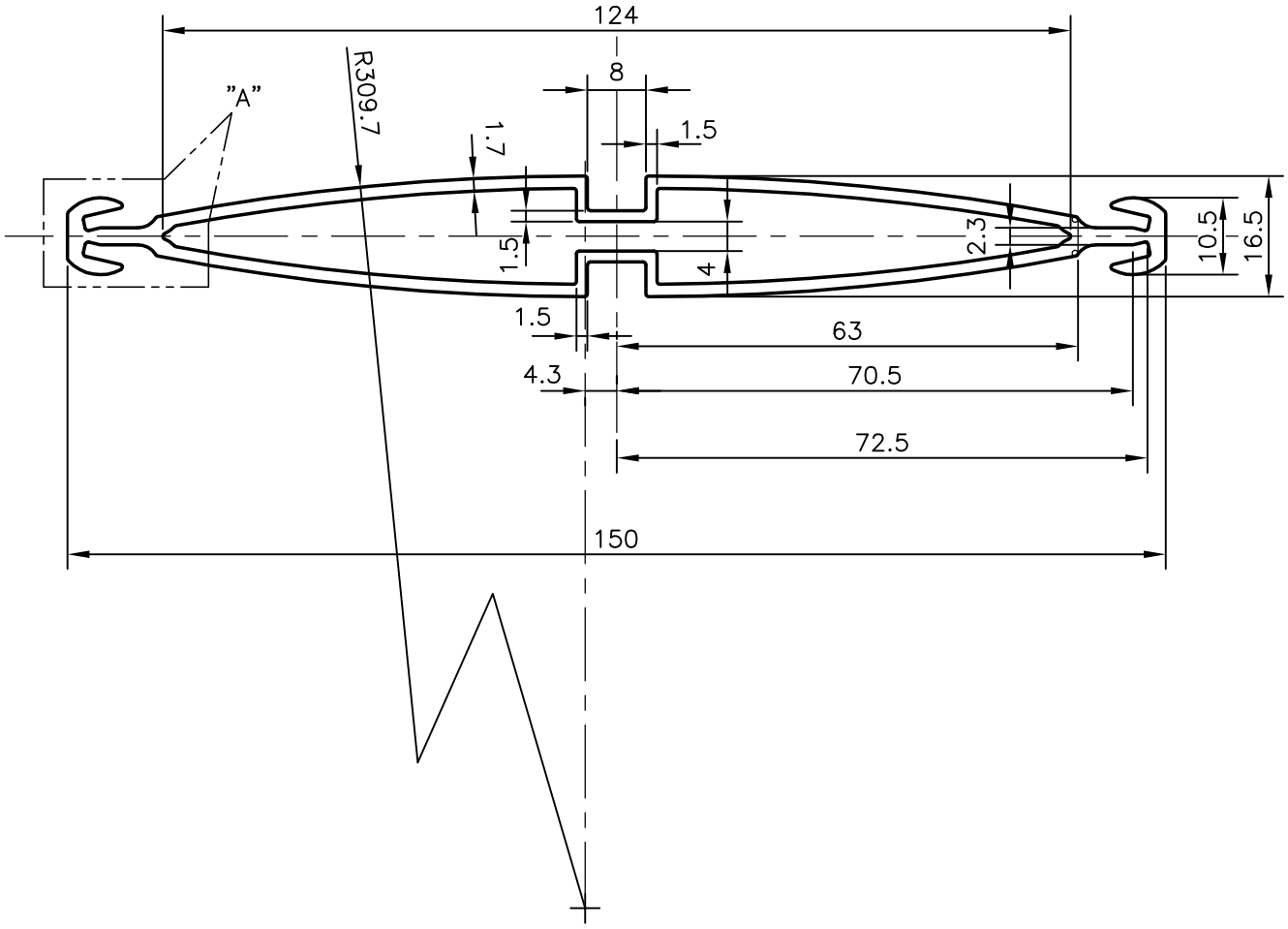

JINDAL SYMBOL OF QUALITY AN ISO 9001 COMPANY	*JINDAL ALUMINIUM LTD.* *BANGALORE–560073 (INDIA)*		NAME	DATE
		DRAWN	J.P.KAUSHIK	21–04–2009
		CHECKED		
		APPROVED		

1. ALL DIMENSIONS ARE IN mm.
2. ROUND OFF ALL SHARP CORNERS WITH 0.40 mm.
3. TOLERANCES WILL BE AS PER IS:6477–1983 UNLESS OTHERWISE SPECIFIED

SCALE	1:1
AREA mm^2	583.339
PERIMETER mm.	387.563
WEIGHT kg/m	1.575

PARTY'S NAME	MAHI ENTERPRISE, MUMBAI
PARTY'S DRAWING No.	SS 002–A
ALLOY & TEMPER	HE9 WP
DESCRIPTION	DOUBLE SIDE SECTION

DRAWING No.	SECTION No.
P–9178	–
S2124	S2124
26841	26841