P-7796-2
X800
26851

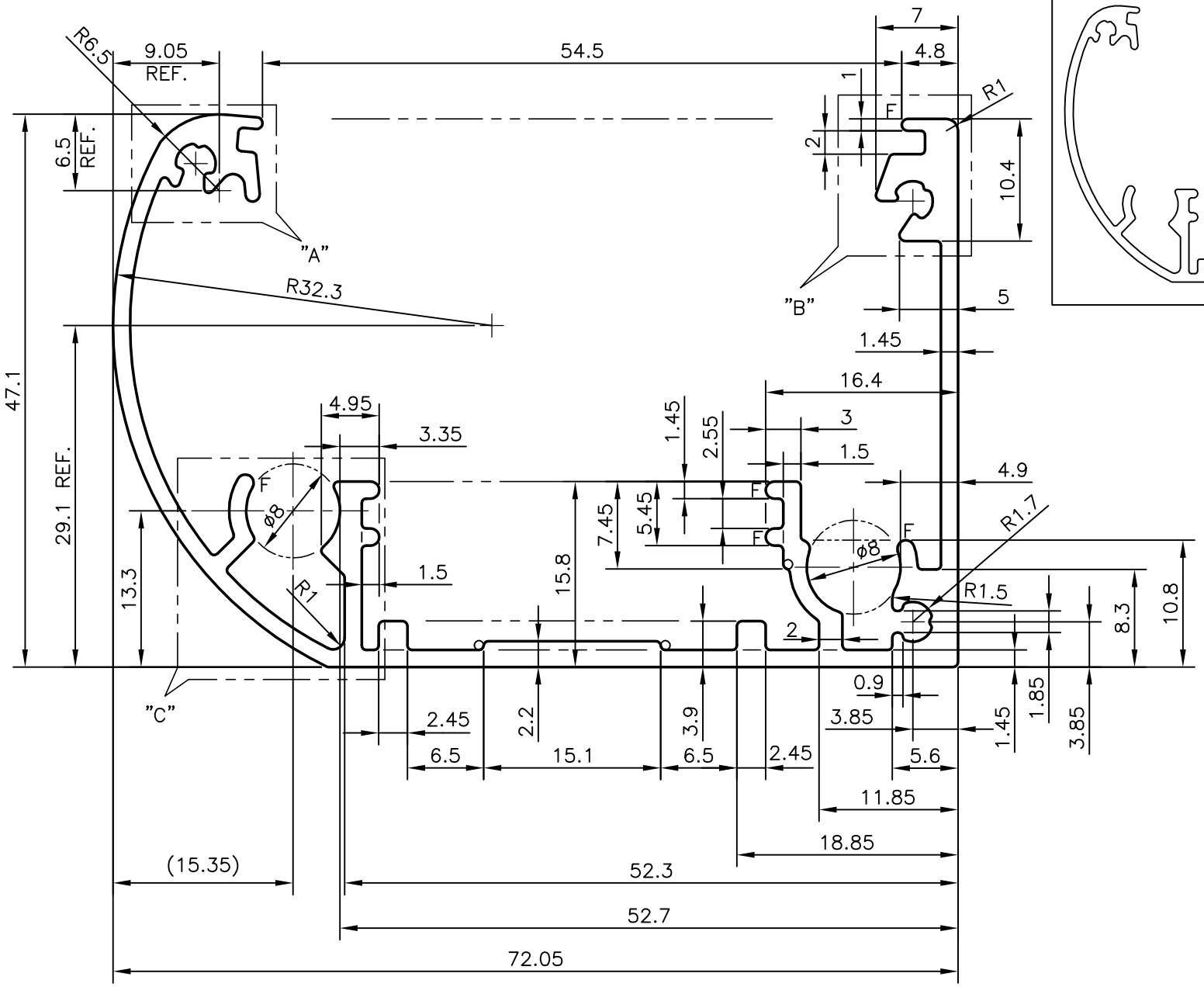

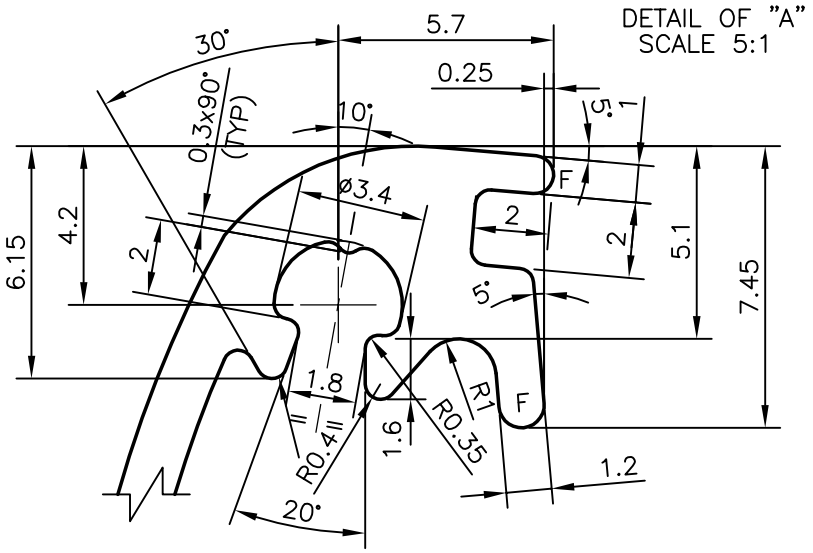

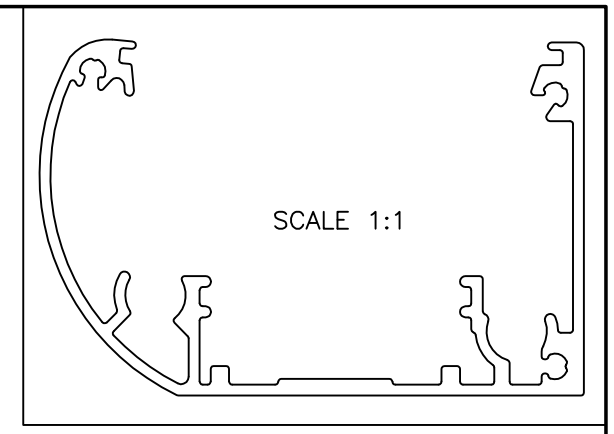

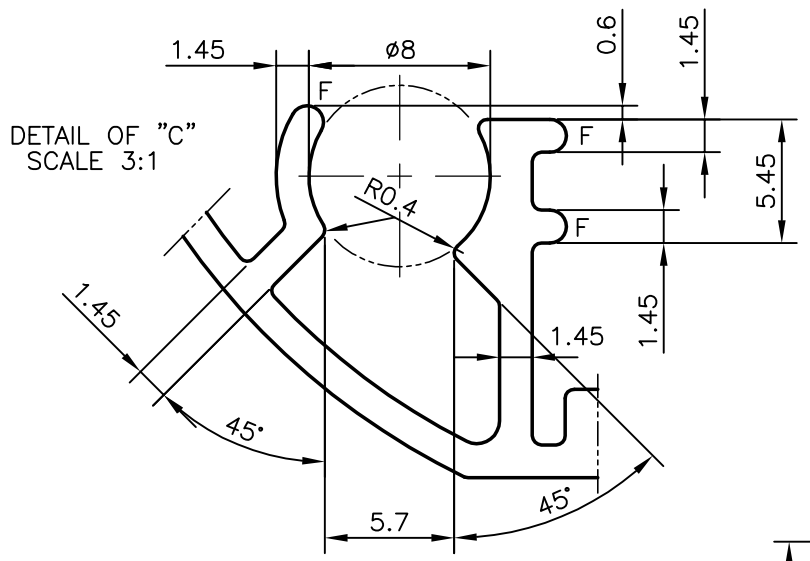

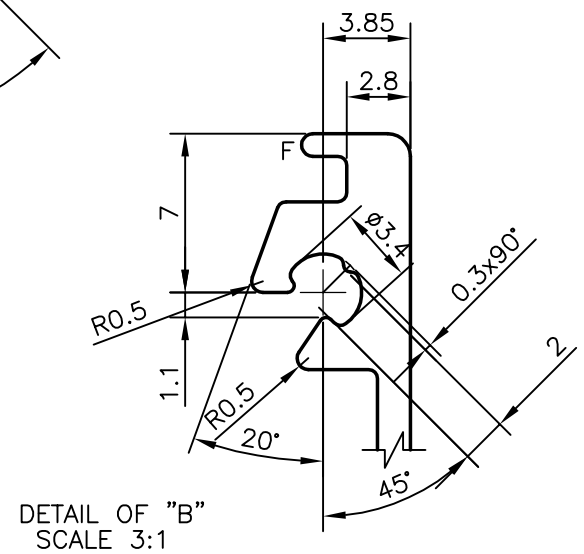

F = FULL RADIUS (9 PLACES)
UNSPECIFIED WALL THICKNESS = 1.45 mm

			NAME	DATE
JINDAL SYMBOL OF QUALITY AN ISO 9001 COMPANY	*JINDAL ALUMINIUM LTD.* *BANGALORE-560073 (INDIA)*	DRAWN	PRASANNA.H	19-01-2008
		CHECKED		
		APPROVED		
1. ALL DIMENSIONS ARE IN mm. 2. ROUND OFF ALL SHARP CORNERS WITH 0.40 mm. 3. TOLERANCES WILL BE AS PER IS:3965-1981 UNLESS OTHERWISE SPECIFIED		SCALE		2:1
		AREA mm^2		399.404
		PERIMETER mm.		462.204
		WEIGHT kg/m		1.078
PARTY'S NAME	WILLIAMS REFREGERATION, BANGALORE	DRAWING No.		SECTION No.
PARTY'S DRAWING No.	AS PER SAMPLE	P-7796-2		–
ALLOY & TEMPER	6060 T6	X800		X800
		26851		26851
DESCRIPTION	MISC. SECTION			