P-9144	
26852	

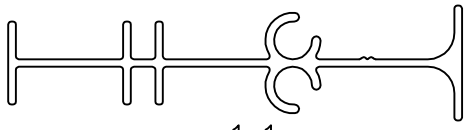

1:1

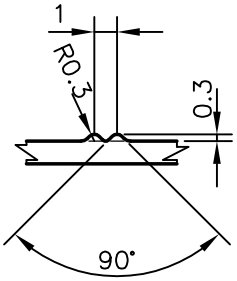

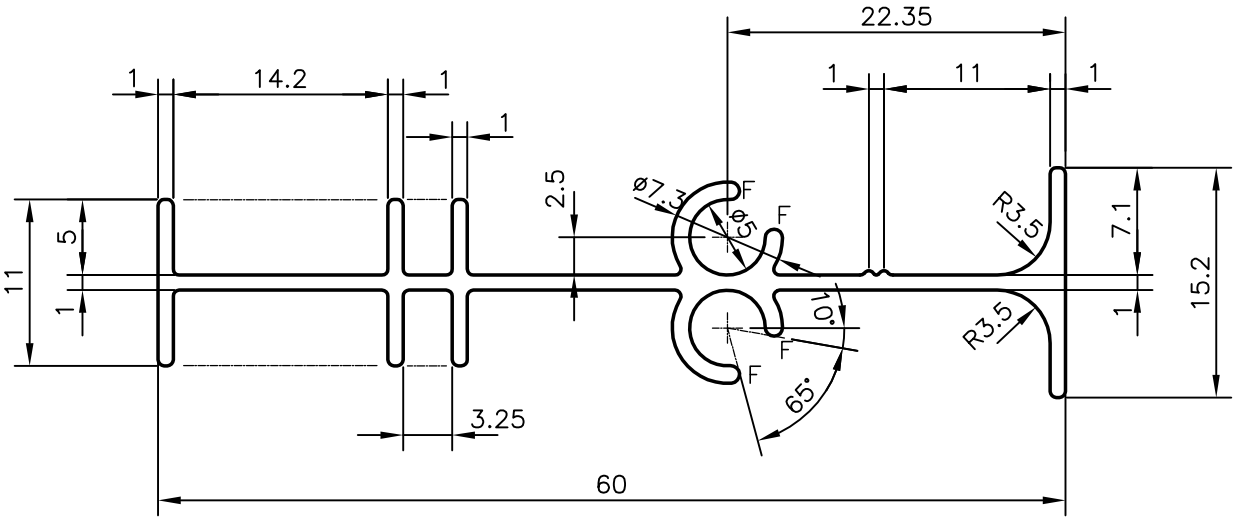

GENERAL WALL THICKNESS 1.0 mm (TYP)

F = FULL RADIUS

JINDAL SYMBOL OF QUALITY AN ISO 9001 COMPANY	*JINDAL ALUMINIUM LTD.* *BANGALORE-560073 (INDIA)*		NAME	DATE
		DRAWN	J.P.KAUSHIK	01-04-2009
		CHECKED		
		APPROVED	S.S.GARG	30-06-2010
1. ALL DIMENSIONS ARE IN mm. 2. ROUND OFF ALL SHARP CORNERS WITH 0.4 mm. 3. TOLERANCES WILL BE AS PER BS:EN-755 UNLESS OTHERWISE SPECIFIED		SCALE		2:1
		AREA mm^2		137.492
		PERIMETER mm.		243.813
PARTY'S NAME	EASA HUSAIN AL-YOUSIFI &SONS CO., KUWAIT	WEIGHT kg/m		0.371
		DRAWING No.		SECTION No.
PARTY'S DRAWING No.	AS PER SAMPLE	P-9144		
		26852		26852
ALLOY & TEMPER	6063 T6			
DESCRIPTION	AIR GRILL SECTION			