P-14684	
26902	

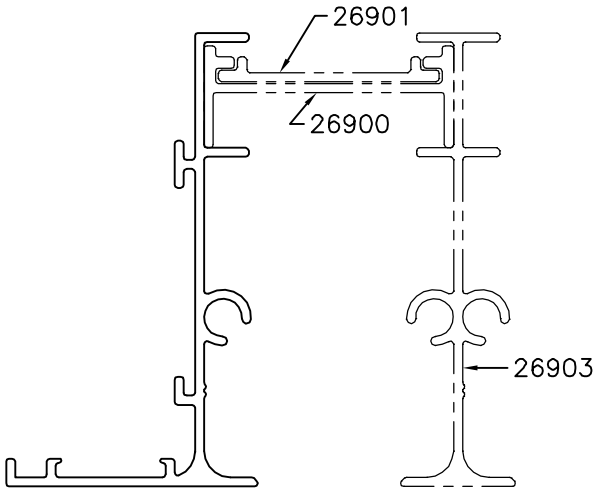

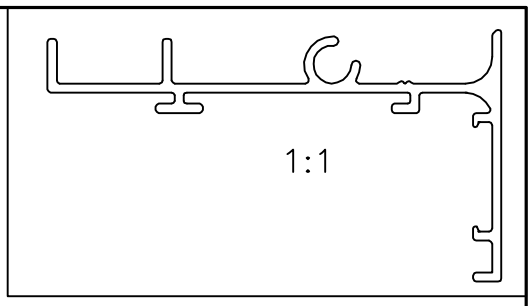

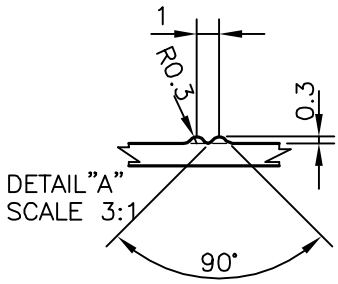

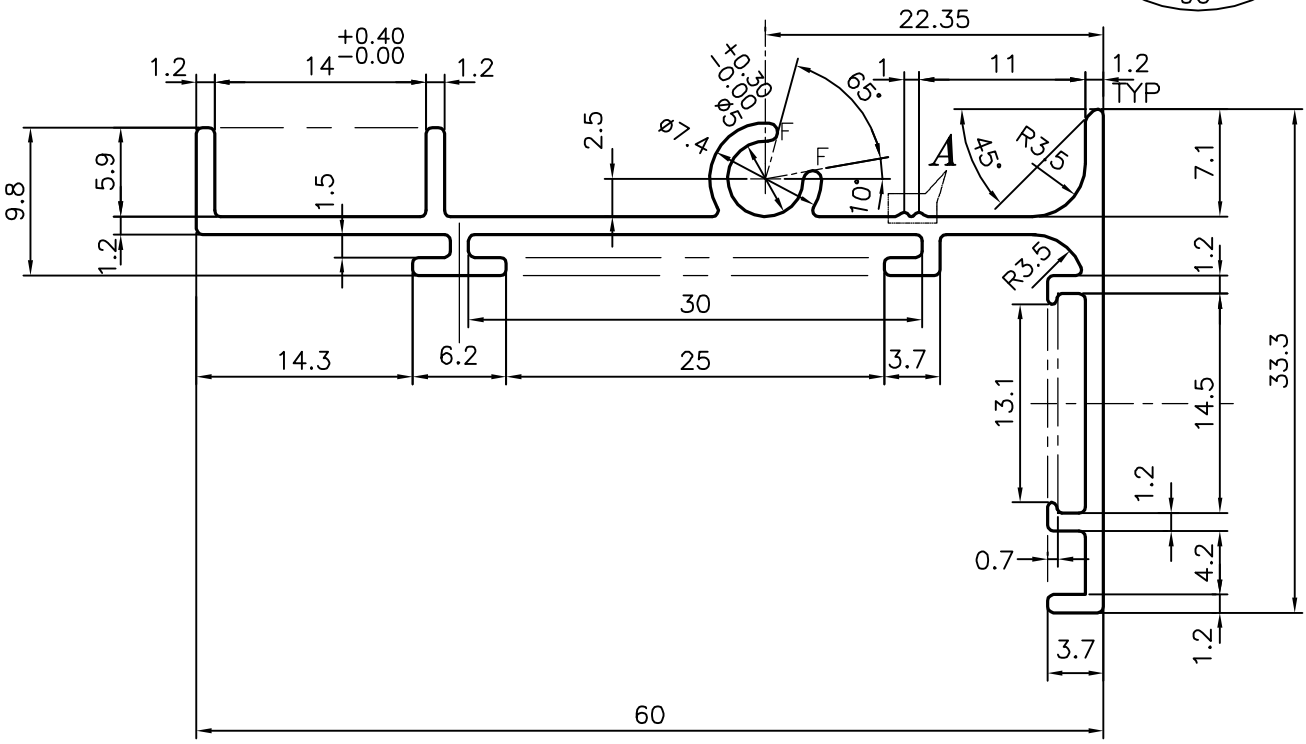

F = FULL RADIUS (2 PLACES)

			NAME	DATE
SYMBOL OF QUALITY AN ISO 9001 COMPANY	*JINDAL ALUMINIUM LTD.* *BANGALORE-560073 (INDIA)*	DRAWN	J.P.KAUSHIK	03-06-2015
		CHECKED		
		APPROVED	S.S.GARG	29-06-2015

1. ALL DIMENSIONS ARE IN mm.
2. ROUND OFF ALL SHARP CORNERS WITH 0.40 mm.
3. TOLERANCES WILL BE AS PER BS:EN-755-9 UNLESS OTHERWISE SPECIFIED

SCALE	2:1
AREA mm^2	169.812
PERIMETER mm.	264.653
WEIGHT kg/m	0.458

PARTY'S NAME	DASCO DUCTING & SERVICING CO., KUWAIT
PARTY'S DRAWING No.	11337
ALLOY & TEMPER	6063 T6
DESCRIPTION	AIR GRILL SECTION

DRAWING No.	SECTION No.
P-14684	
26902	26902