P-14685
26903

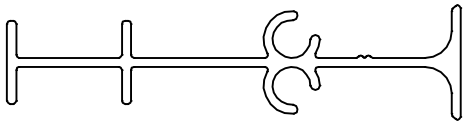

1:1

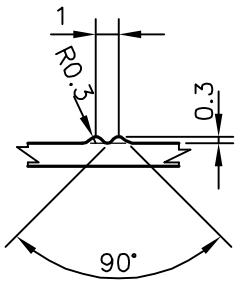

DETAIL"A"
SCALE 3:1

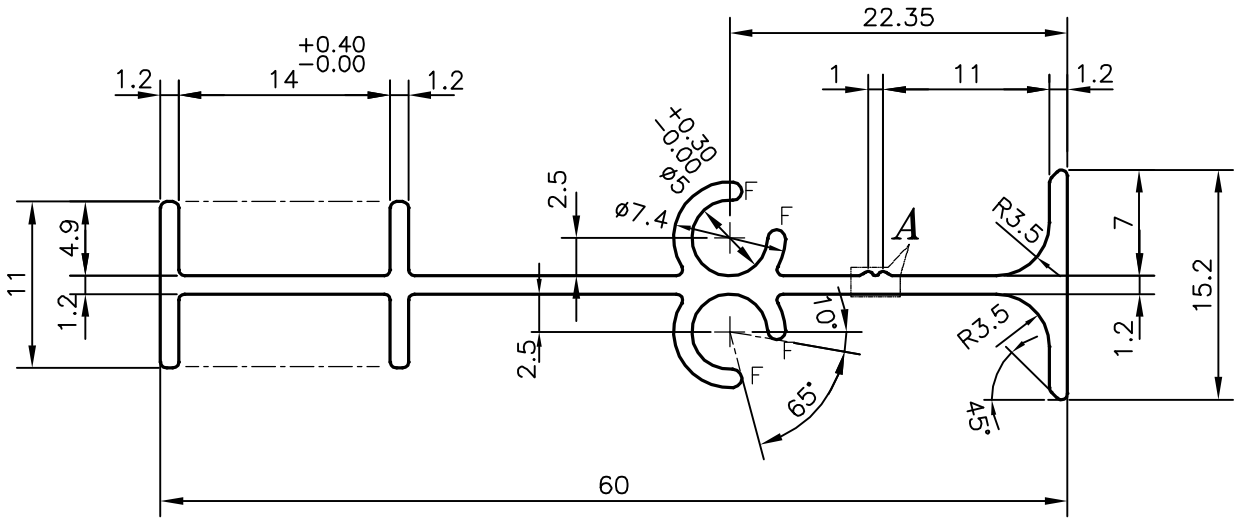

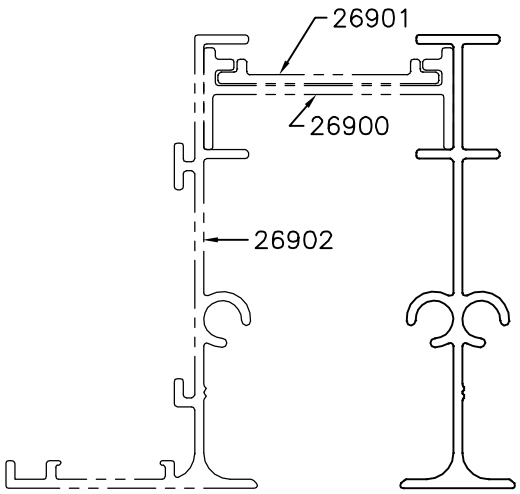

F = FULL RADIUS (4 PLACES)

			NAME	DATE
JINDAL SYMBOL OF QUALITY AN ISO 9001 COMPANY	JINDAL ALUMINIUM LTD. BANGALORE-560073 (INDIA)	DRAWN	J.P.KAUSHIK	03-06-2015
		CHECKED		
		APPROVED	S.S.GARG	29-06-2015

1. ALL DIMENSIONS ARE IN mm.
2. ROUND OFF ALL SHARP CORNERS WITH 0.40 mm.
3. TOLERANCES WILL BE AS PER BS:EN-755-9 UNLESS OTHERWISE SPECIFIED

SCALE	2:1
AREA mm^2	146.488
PERIMETER mm.	223.984
WEIGHT kg/m	0.396

PARTY'S NAME	DASCO DUCTING & SERVICING CO., KUWAIT
PARTY'S DRAWING No.	11338
ALLOY & TEMPER	6063 T6
DESCRIPTION	AIR GRILL SECTION

DRAWING No.	SECTION No.
P-14685	
26903	26903