P-14804-2

26905

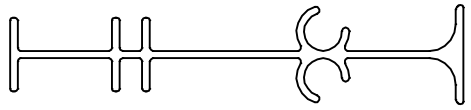

1:1

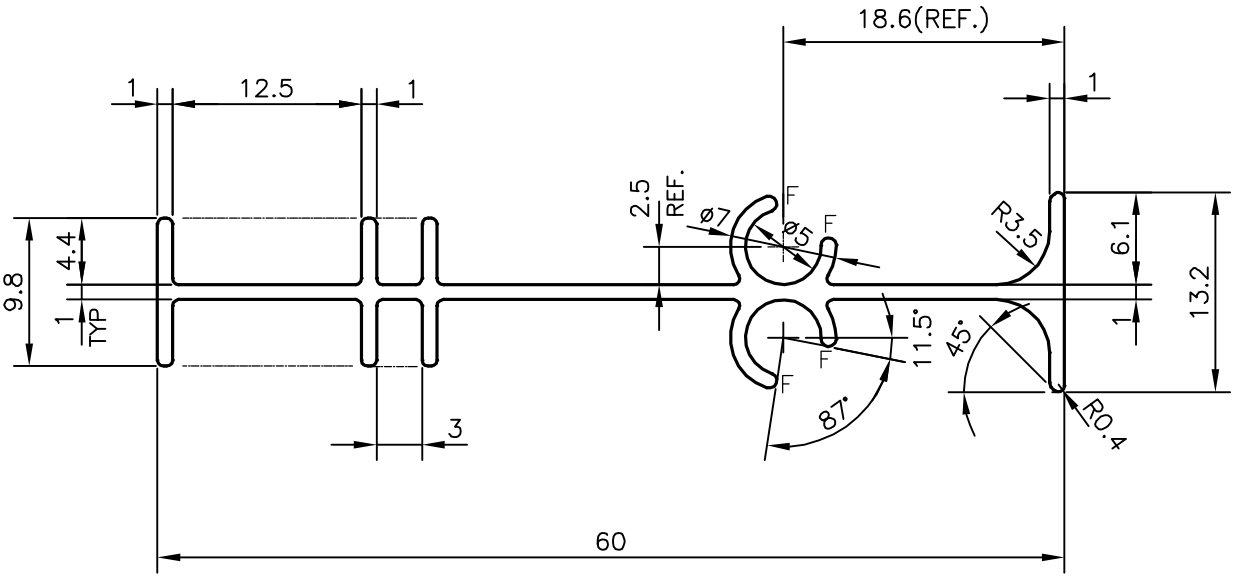

F = FULL RADIUS(4 PLAES)

			NAME	DATE
JINDAL SYMBOL OF QUALITY AN ISO 9001 COMPANY	*JINDAL ALUMINIUM LTD.* *BANGALORE-560073 (INDIA)*	DRAWN	J.P.KAUSHIK	03-07-2015
		CHECKED		
		APPROVED	S.S.GARG	06-07-2015

1. ALL DIMENSIONS ARE IN mm.
2. ROUND OFF ALL SHARP CORNERS WITH 0.4 mm.
3. TOLERANCES WILL BE AS PER BS:EN-755-9 UNLESS OTHERWISE SPECIFIED

SCALE	2:1
AREA mm^2	125.49
PERIMETER mm.	227.186
WEIGHT kg/m	0.339

PARTY'S NAME	NOOR AL EYMAN CO., BAHRAIN
PARTY'S DRAWING No.	AS PER SAMPLE
ALLOY & TEMPER	6063 T6
DESCRIPTION	AIR GRILL SECTION

DRAWING No.	SECTION No.
P-14804-2	
26905	26905