P-14878-3
26909

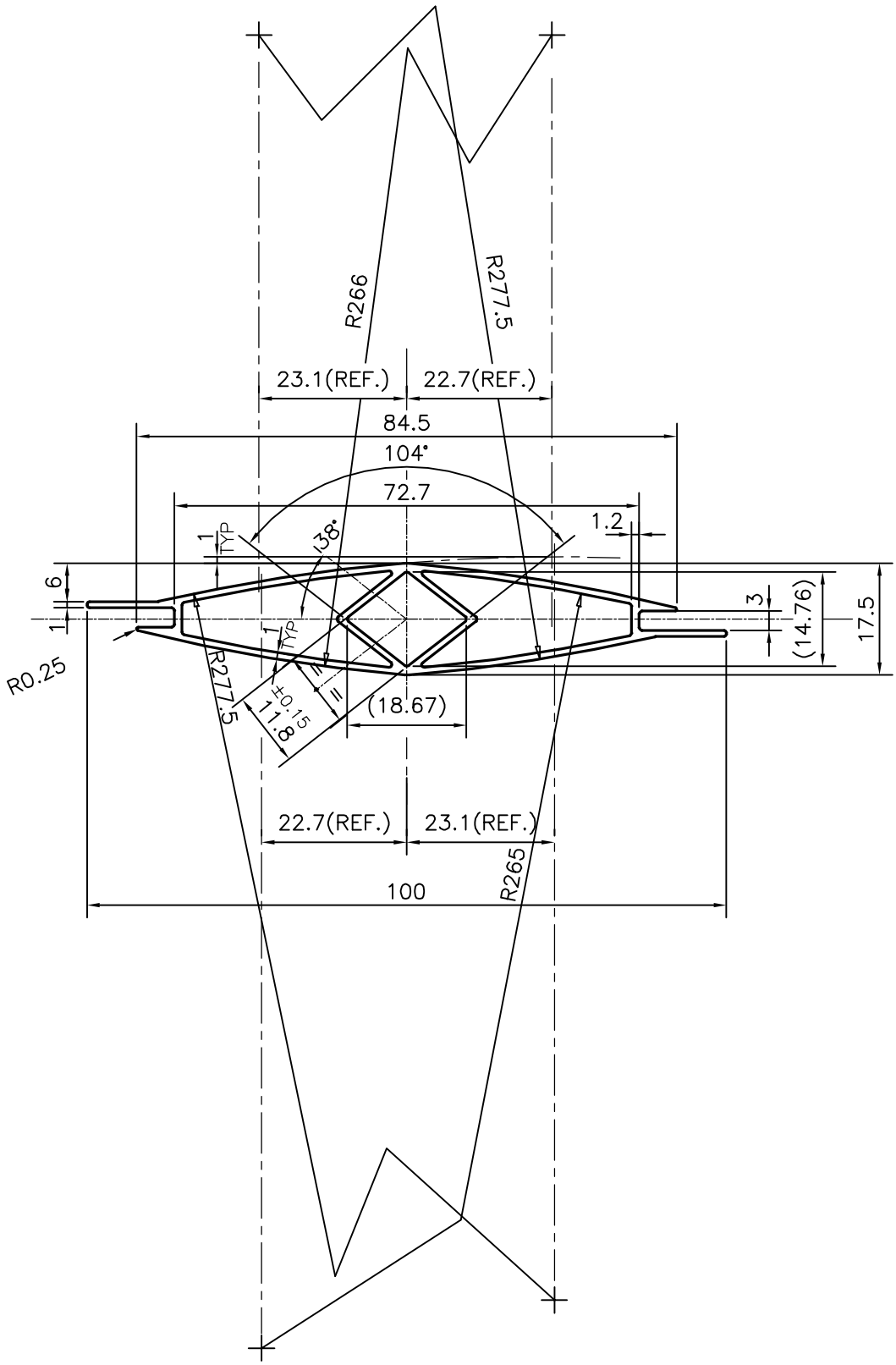

JINDAL SYMBOL OF QUALITY AN ISO 9001 COMPANY	*JINDAL ALUMINIUM LTD.* *BANGALORE-560073 (INDIA)*		NAME	DATE
		DRAWN	J.P.KAUSHIK	04-08-2015
		CHECKED		
		APPROVED	S.S.GARG	07-08-2015

1. ALL DIMENSIONS ARE IN mm.
2. ROUND OFF ALL SHARP CORNERS WITH 0.40 mm.
3. TOLERANCES WILL BE AS PER, BS:EN-755-9 UNLESS OTHERWISE SPECIFIED

SCALE	1:1
AREA mm^2	252.256
PERIMETER mm.	233.053
WEIGHT kg/m	0.681

PARTY'S NAME	KBE INTERNATIONAL SAL LEBANON,MIDDLE EAST
PARTY'S DRAWING No.	AS PER AutoCAD DRAWING (REV. 2-7-2015)
ALLOY & TEMPER	6063 T6
DESCRIPTION	AIR GRILL SECTION

DRAWING No.	SECTION No.
P-14878-3	–
26909	26909